Ship and Submarine Cost Research and Database Literature Review

For the

Naval Center for Cost Analysis

Final

November 16, 2016

TABLE OF CONTENTS

1: EXECUTIVE SUMMARY **3**
2: HISTORICAL COST RESEARCH - ACQUISITION **6**
2.1 "THE DEFENSE AUTOMATED COST INFORMATION MANAGEMENT SYSTEM (DACIMS)", OSD **6**
2.1.1 DESCRIPTION OF DATASET 7
2.1.2 DESCRIPTION OF CERS 8
2.1.3 STRENGTHS AND WEAKNESSES 8
2.2 "INFORMATION MANAGEMENT SYSTEM (IMS)", NAVSEA **8**
2.2.1 DESCRIPTION OF DATASET 9
2.2.2 DESCRIPTION OF CERS 10
2.2.3 STRENGTH AND WEAKNESSES 11
2.3 "NAVSEA 05C SHIPBUILDING INDICES", NAVSEA **11**
2.3.1 DESCRIPTION OF DATASET 11
2.3.2 DESCRIPTION OF CER 12
2.3.3 STRENGTHS AND WEAKNESSES 12
2.4 "SHIP PRODUCTION MAN-HOUR ESTIMATING METHODOLOGY", NAVSEA, 2005 ..... **12**
2.4.1 DESCRIPTION OF DATASET 13
2.4.2 DESCRIPTION OF CERS 13
2.4.3 STRENGTHS AND WEAKNESSES 14
2.5 "SHIPBOARD SYSYTEM INTEGRATION (SSI) COST ESTIMATING METHODOLOGY", NCCA, OSD, 2002, 2005 ..... **14**
2.5.1 DESCRIPTION OF DATASET 15
2.5.2 DESCRIPTION OF CERS 17
2.5.3 STRENGTHS AND WEAKNESSES 19
2.6 "SURFACE COMBATANT PERFORMANCE BASED COST MODEL (PBCM)", NSWC, 2012 ..... **19**
2.6.1 DESCRIPTION OF DATASET 19
2.6.2 DESCRIPTION OF CERS 20
2.6.3 STRENGTHS AND WEAKNESSES 22
2.7 "SUBMARINE PERFORMANCE BASED COST MODEL (PBCM)", NSWC, NAVSEA 2011 ..... **22**
2.7.1 DESCRIPTION OF DATASET 23
2.7.2 DESCRIPTION OF CERS 23
2.7.3 STRENGTHS AND WEAKNESSES 24
2.8 "ADVANCES IN AIRCRAFT CARRIER LIFE-CYCLE COST ANALYSIS FOR ACQUISITION AND OWNERSHIP DECISION MAKING", NAVSEA, 2001 ..... **24**
2.8.1 DESCRIPTION OF DATASET 25
2.8.2 DESCRIPTION OF CERS 26
2.8.3 STRENGTHS AND WEAKNESSES 26
2.9 "CHANGING AIRCRAFT CARRIER PROCUREMENT SCHEDULES", RAND, 2011 ..... **27**
2.9.1 DESCRIPTION OF DATASET 27
2.9.2 DESCRIPTION OF CERS 28
2.9.3 STRENGTHS AND WEAKNESSES 28
2.10 "AN APPLICATION OF DATA MINING ALGORITHMS FOR SHIPBUILDING COST ESTIMATION", NATO, 2011 ..... **28**

2.10.1 DESCRIPTION OF DATASETS 29
2.10.2 DESCRIPTION OF CERS 30
2.10.3 STRENGTHS AND WEAKNESSES 33
2.11 "INCREMENTAL WEIGHT AND COST MODEL", Northrop Grumman Corporation, 2005 33
2.11.1 DESCRIPTION OF DATASET 34
2.11.2 DESCRIPTION OF CERS 34
2.11.3 STRENGTHS AND WEAKNESSES 35
ACQUISITION CONCLUSION 36
3: HISTORICAL COST RESEARCH - OPERATING AND SUPPORT COSTS 37
3.1 "NAVY'S VISIBILITY AND MANAGEMENT OF OPERATING AND SUPPORT COSTS (VAMOSC)", "VAMOSC VIEWS TOOLS", AND "OPERATING AND SUPPORT COST ANALYSIS MODEL (OSCAM)", NCCA 37
3.1.1 DESCRIPTION OF DATASET 39
3.1.2 DESCRIPTION OF CERS 41
3.1.3 STRENGTH AND WEAKNESSES 43
3.2 "MANPOWER COST ESTIMATING TOOL FOR ENHANCED ONLINE REPORTING (METEOR)", NCCA 44
3.2.1 DESCRIPTION OF DATASEST 44
3.2.2 DESCRIPTION OF CERS 45
3.3 "ANALYSIS OF THE IMPACT OF OPTEMPO ON NAVY O&S COST", Technomics, 2004 46
3.3.1 DESCRIPTION OF DATASET 46
3.3.2 DESCRIPTION OF CERS 47
3.3.3 STRENGTHS AND WEAKNESSES 49
3.4 "SHIP SCHEDULED OVERHAUL COSTS OVER TIME", TASC, 2003; "OPERATING AND SUPPORT COST OVER TIME", TASC, 2004; AND "HOW AGE AFFECTS OPERATIONS AND SUPPORT (O&S) COSTS DIFFERENTLY ACROSS PLATFORMS", TASC, 2006 49
3.4.1 DESCRIPTION OF DATASET 50
3.4.2 DESCRIPTION OF CERS 50
3.4.3 STRENGTHS AND WEAKNESSES 51
OPERATING & SUPPORT CONCLUSION 51
4: OVERALL CONSLUSION 53
5: FURTHER READING, AND FUTURE RESEARCH 55
Research and Development 55
Production 56
O&S 56
Industrial Base Analysis 56
Earned Value Management 57
Overarching Needs and Future Research 58
Acquisition 59
O&S 60
6: APPENDICES 62
APPENDIX A: Definitions 62
APPENDIX B: Additional Acquisition Briefs and Studies. 75
APPENDIX C: Additional O&S Briefs and Studies 80
APPENDIX D: References 83

1: EXECUTIVE SUMMARY

This document provides an overview of the state of cost research associated with United States Navy ships, including aircraft carriers, amphibious and auxiliary ships, surface combatants, and submarines for the last ten years. The literature review is an attempt to summarize an initial data collection and review to categorize, and evaluate ship and submarine data sets and tools, cost estimating methodologies, and associated case studies.

This effort focused on readily available cost literature, cost conference proceedings, and the Naval Center for Cost Analysis (NCCA) Collaborative Cost Research Library (CCRL). As a result, there are 47 research papers discussed in this report. The detail summary of research papers includes data sets, estimating methods, and case studies. Further insight into the studies has been attempted by identifying life-cycle cost phases, industrial base and Earned Value Management. The following figure groups the research papers by life-cycle phase.

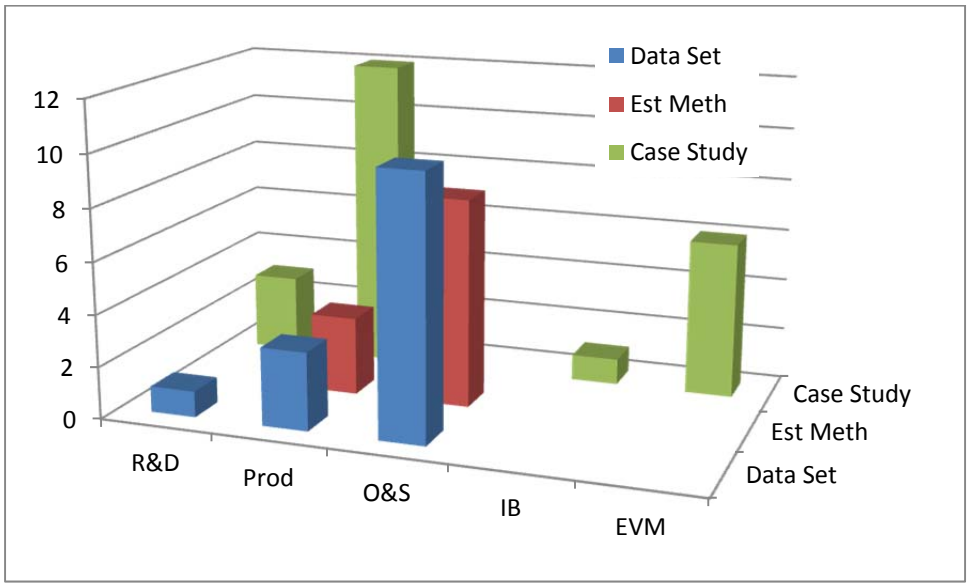

- **Data Set** – There are 14 papers, one related to Research & Development, three related to Production, and ten related to Operating & Support.
- **Estimating Method** – There are 11 papers, three related to Production and eight related to Operating & Support.
- **Case Study** – There are 22 papers, three related to Research & Development, 12 related to Production, one related to Industrial Base, and six related to Earned Value Management.

The following figure depicts a timeline of the studies that were examined in more detail and are shown in Section 2 and Section 3 of this literature review. DACIMS, IMS, and the Shipbuilding Indices as well as VAMOSC, VAMOSC Views, OSCAM, and METEOR, are designed to be periodically updated with new data.

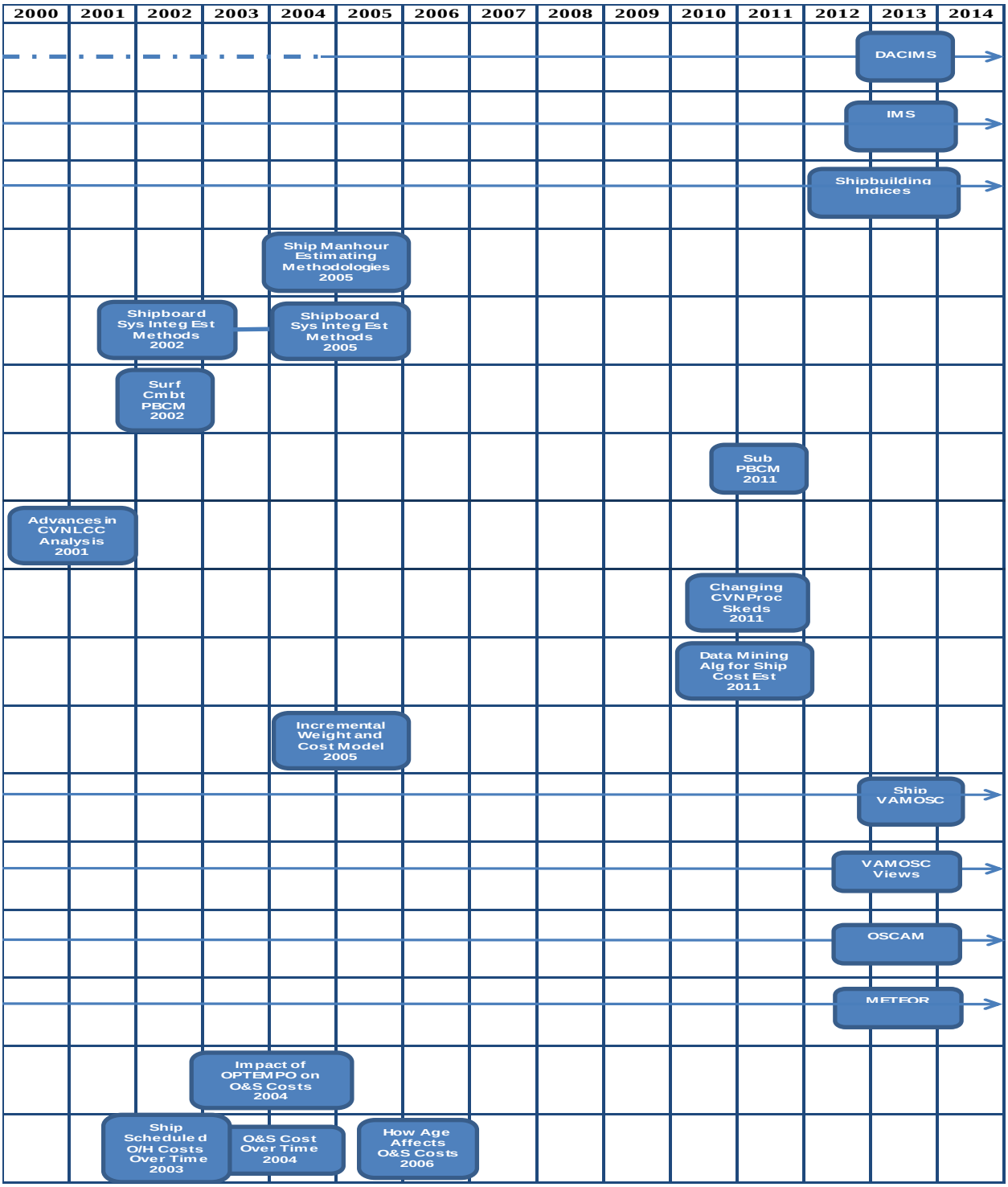

Similarly, many production case studies used the Defense Automated Cost Information Management System (DACIMS) as the primary data repository for production, deployment, and some research and development data. Ship types such as aircraft carriers, surface combatants (cruisers, destroyers, and frigates), amphibious warships, and submarines tend to be the focus of most research efforts.

Appendix B and C provide brief summaries of useful studies and databases not reviewed in detail within the brief synopses.

This literature review is an update and revision to TR-13-23-R01, Ship and Submarine Cost Research and Database Literature Review, developed by Technomics, Inc., dated March 5, 2014, sponsored by NCCA. NCCA included studies that provide an overview of recent databases and studies available to analysts. Inclusion does not imply endorsement. Analysts will need to evaluate whether these databases and studies are relevant for their purposes.

2: HISTORICAL COST RESEARCH - ACQUISITION

This literature review can provide an important service to the Navy cost community where time and resources to collect research often does not see the light of day. Additionally, this task can provide the linkages among ship types, life-cycle phases, life-cycle costing for the Acquisition and O&S studies.

The first set of studies in this review pertains to cost estimating ship production, including performance based cost modeling, man-hour cost estimating, shipboard system integration, case studies for specific ship classes, and all of the supporting databases to provide data for analysis.

The research papers, case studies and datasets reviewed in the Acquisition Phases are as follows:

1. "The Defense Automated Cost Information Management System (DACIMS)"
2. "NAVSEA Information Management System (IMS)"
3. "NAVSEA 05C Shipbuilding Indices"
4. "Ship Production Man-hour Estimating Methodology"
5. "Shipboard System Integration (SSI) Cost Estimating Methodology"
6. "Surface Combatant Performance Based Cost Model (PBCM)"
7. "Submarine Performance Based Cost Model (PBCM)"
8. "Advances in Aircraft Carrier Life-Cycle Cost Analysis for Acquisition and Ownership Decision-Making"
9. "Changing Aircraft Carrier Procurement Schedules – Effects that a five year procurement cycle would have on cost, availability and shipyard manpower and workload"
10. "An Application of Data Mining Algorithms for Shipbuilding Cost Estimation"

Additional secondary studies for acquisition are in Appendix B.

2.1 "THE DEFENSE AUTOMATED COST INFORMATION MANAGEMENT SYSTEM (DACIMS)", OSD

DACIMS is operated by the Defense Cost and Resource Center (DCARC) within the Office of the Secretary of Defense (OSD) Cost Assessment and Program Evaluation (CAPE) Directorate. The primary role of DCARC is to collect historical and current Major Defense Acquisition Program (MDAP) and Major Automated Information System (MAIS) cost and software resource data in a joint service environment. This data is available for use by authorized government

analysts to estimate the cost of ongoing and future government programs. The DCARC website can be accessed at: https://dcarc.cape.osd.mil.

DACIMS is a secure web-based information system that hosts the Contractor Cost Data Reports (CCDR) repository, the Software Resource Data Reports (SRDR) repository, and the Forward Pricing Rate (FPR) library.

2.1.1 DESCRIPTION OF DATASET

DACIMS holds scanned images of historical CCDRs and SRDRs for legacy MDAPs and MAISs, dating back to 1966, as well as CCDRs and SRDRs in Microsoft Excel-compatible formats for more recent MDAPs and MAISs. DACIMS also contains supporting CSDR materials, such as Contractor Work Breakdown Structure (CWBS) dictionaries and Cost and Software Data Reporting (CSDR) validation memos. The library is organized by weapon system commodity type, MDAP, phase, contract, and contractor. Contractors prepare CCDRs using data extracted from their internal accounting records and submit reports to the government, including the DCARC office and the appropriate MDAP office managing the contract.

The data repository spans all major weapon commodity classes per MIL-HDBK-881; at a minimum, cost elements are reported to a level 3 (and often lower) WBS, depending on Acquisition Category (ACAT) designation and the value of individual contracts and subcontracts within the program. CCDRs provide recurring and nonrecurring costs (and labor hours) data on major contracts aligned with a standard WBS that allows for pooled data analysis, CER development, and cost factor development. DACIMS data is frequently used in Independent Cost Estimates (ICEs), Program Life-Cycle Cost Estimates (PLCCEs), Analyses of Alternatives (AoAs), and other studies.

There are data for CVN-78, DDG-1000, DDG-51, LCS, JHSV, MLP, Ohio Class Submarine (SSBN), Remote Mine hunting System (RMS), Ship to Shore Connector, Ohio Class Replacement (SSBN-X), LPD, LHA, SSN-21, et cetera. It also has major ship weapons programs including Cobra Judy Replacement, CEC, AAG and EMALS. For many years, most shipbuilding programs received waivers that exempted them from CCDR reporting; the waiver was rescinded in late 2005.

CCDRs provide recurring and nonrecurring costs (and labor hours) data on major contracts aligned with a standard WBS which allows for pooled data analysis, CER development, and cost factor development.

2.1.2 DESCRIPTION OF CERS

DACIMS does not contain any CERs. However, contractors prepare CCDRs using data extracted from their internal accounting records and submits to DCARC.

Cost analysts use this reported historical cost data, normalize cost data and use the normalized data in developing CERs for major cost drivers in relationship to performance parameters.

2.1.3 STRENGTHS AND WEAKNESSES

DACIMS is the only authoritative data source for all ACAT I MDAP and MAIS programs for contractor cost data reports (CCDR), software resource data reports (SRDR), and contractor performance reports (CPR). Integrated Master Schedules (IMS) are provided with CPR reports but vary in depth and quality. Data Item Description, DD Form 1921- 3 provides contractor business base that helps cost analysts to estimate overhead (O/H) cost.

2.2 "INFORMATION MANAGEMENT SYSTEM (IMS)", NAVSEA

The NAVSEA IMS is a source of historical ship acquisition cost, performance, schedule, and technical data that can serve as the basis for future ship cost estimates. It is maintained by NAVSEA 05C and only government personnel within the NAVSEA cost community (including NCCA) can gain access.

The objectives of IMS was to collect ship cost, technical and programmatic data and collect all past ship and weapons systems estimates, cost element relationships and factors so that cost analysts can retrieve data more quickly, spend more time on the analysis and improve the quality of cost estimates. It is database that is accessible through a web interface, https://www.ncca.navy.mil/ims2. This is a government only database and does require authorization for use.

Users can download the data of historical systems in Microsoft Excel, XML, and PDF formats. The site houses cost, contract, budget, labor rate, technical, and programmatic data for historical ship and combat system programs within its relational structure. Data is updated throughout the year, as it becomes available.

2.2.1 DESCRIPTION OF DATASET

The following data can be found on the site:

Ships

- Actual obligations from the Standard Accounting and Reporting Systems (STARS)
  - P5 budget format
  - Major cost category
- Final or latest shipbuilding costs from Cost Performance Reports (CPRs)
  - Actual labor, overhead, and material costs
  - Actual production and engineering man-hours
- Budget costs from:
  - Navy Budget
  - OSD Budget
  - President's Budget
- Bid cost data by ship work breakdown structure (SWBS)
  - Labor, overhead, material, FCCM, profit
  - 3-digit breakout of man-hours and material dollars
- Special cost estimates
  - Milestone events
  - Contract awards
- Production & engineering man-hour outlays (CPRs)
- Contract files by contractor and/or shipyard
- Technical Data
  - Weights by SWBS
  - Length/Beam/Draft
  - Speed

Combat Systems

- GFM database for NAVSEA form 7300 cost for major weapon systems

- Fiscal year summaries
- CPRs
- Contractor Cost Data Reports (CCDRs) (DD Form 1921, DD Form 1921-1)
- Other Reports: CER, Cost Growth, Cost Queries, Information Summary, Program Cost and Quantity Summaries, Program/System Cost Summaries
- Phasing cost summary for P-8A

Labor Rates

- Direct Labor rates
- Overhead rates
- General and administrative (G&A) and cost of money (COM) rates
- Forward Pricing Rate recommendation (FPRR) or Forward Pricing Rate Agreement (FPRA)

These data are available for a number of ship yards, ship platforms, and by ship hull numbers. For example, this dataset includes cost and technical data for platforms and hulls such as: CVN-78, LHA-7, LPD, DDG-51, and final cost data for LHA-6 and the DDG-51 Class while hulls 105 and later need to be updated.

2.2.2 DESCRIPTION OF CERS

In IMS database, available CERs are grouped under Management reports/Analysis Tool as described below:

CERs

- SWBS analysis

Budget

- Budget Queries
- Budget Tracking
- Budget Cost factors

Man-hour/ton

- By shipyard
- Production, Engineering and Total hours

Estimate Accuracy report

- Initial Estimate, Award cost, Final Cost and Inflation factor

There are combat system CERs and cost factors by WBS in database for various weapons systems. The latest weapons system data needs to be updated and in most instances data is not available after 2008.

2.2.3 STRENGTHS AND WEAKNESSES

The strength of IMS is the capability to provide cost, technical, EVM and cost performance data in a single database by WBS, platform, hull, ship yard and prime contractor for all DON ship platforms and major weapon and combat systems. The NAVSEA IMS is an excellent source for historical ship acquisition data, rates, and other technical data that can serve as the basis for future ship cost estimates. The major weakness of IMS is that it has not regularly been updated since 2008.

NAVSEA also maintains a database called Government Furnished Material (GFM) for hosting estimates for key systems that are provided as government furnished equipment to shipbuilders. These systems are typically not included in the shipbuilder's costs, but are included in government program office costs. Also, access to GFM is controlled by NAVSEA and is not easily accessible. NAVSEA Common Cost Model (NCCM) is no longer maintained.

2.3 "NAVSEA 05C SHIPBUILDING INDICES", NAVSEA

Inflation becomes a substantial cost driver over a ship's contract execution, since shipbuilding construction times are significantly longer than those of any other DoD commodity. NAVSEA 05C has developed an internal shipbuilding indices tool that addresses vendor base specific shipbuilding labor and material inflation in an effort to estimate costs and reduce the likelihood of cost overruns due to inflation.

2.3.1 DESCRIPTION OF DATASET

The dataset includes shipyards' Forward Pricing Rate Agreements (FPRAs), the US Navy shipbuilding plan, Global Insight data, and the latest material vendor surveys. These shipbuilding indices underpin all NAVSEA ship development and procurement cost estimates. The indices contain shipbuilding inflation, consisting of labor, overhead rates, and material

dollars based on shipyard workload. They are updated yearly based on the latest US Navy shipbuilding plan, shipyard FPRAs, Global Insight's future projections of US Bureau of Labor Statistics' (BLS) "Ship Building and Repair" labor and material prices, and Shipbuilding Material Cost Estimating Relationships (MATCER) developed from the NAVSHIPSUPERVISOR (NAVSUP) Shipbuilding material vendor survey.

Although this briefing is available to anyone, the actual indices are proprietary. They are generally available only to NAVSEA employees, but can be made available to other DoD organizations or their designated representatives on a case-by-case basis. Note that these indices address only acquisition costs associated with shipyards.

2.3.2 DESCRIPTION OF CER

The indices include price escalation, direct rates, overhead rates, and forecasting equations relating indirect cost changes in direct labor, quantity, and industrial base. These CERs and supporting datasets enable the cost community to perform cost studies to help further improve cost estimating processes and methodologies. Government and contractors perform cost analyses using shipbuilding indices on estimating various ship platforms, weapon systems for budget drills, milestone cost estimates and understating industrial base strengths and weakness.

2.3.3 STRENGTHS AND WEAKNESSES

The dataset are generally available only to NAVSEA employees, but can be made available to other DoD organizations or their designated representatives on a case-by-case basis. These indices address only acquisition costs associated with shipyards. Indirect cost CERs or cost factors by major DoD contractors by shipyard, and system manufacturing sites, are not available.

2.4 "SHIP PRODUCTION MAN-HOUR ESTIMATING METHODOLOGY", NAVSEA, 2005

In support of NAVSEA, Technomics, Inc. developed a top-level methodology for estimating ship production man-hours. The methodology estimates production man-hours, including Ship Work Breakdown Structures (SWBS) 100-700 (touch labor) and 900 (support services), but excluding SWBS 800 (recurring engineering).

2.4.1 DESCRIPTION OF DATASET

The identified data in this research study are as follows:

- Production man-hours for lead ships (AO-177, AOE-6, CG-47, CV-59, CV-63, CV-67, CVN-65, CVN-68, DD-963, DDG-51, FFG-7, LHD-1, LHD-5, LSD-41, LSD-49, MHC-51, SSBN-726, SSN-688, T-AGOS 19, T-AO 198)
- Follow-ship production man-hours (AO-177, AOE-6, CG-47, CVN-68, DDG-51, LHD-1, LHD-5, LSD-41, LSD-49, MHC-51, SSBN-726, SSN-688, T-AGOS 19, T-AO 198)

The latest version of the data set provides the secondary data source, but the primary data source is not documented. In instances where the data set draws on NCCA's 2003 Ship Construction Cost Database (SCCD), the primary data source is cost performance reports captured within NCCA's 1993 Ship Construction Cost and Technical Database.

Technomics updated the report in 2015 to better document the data set, but the data sources still reflect secondary, not primary, sources of data.

2.4.2 DESCRIPTION OF CERS

The major cost drivers identified include light ship weights and complexity factors determined by ship density and combat system weight ratio. This parametric analysis assumed that the engineering effort is related to the following parameters: ship complexity, design process, propulsion type, and degree of new design. The effects of advanced design processes were captured with two parameters: (1) a time-trend variable to capture increased productivity over time as a result of improved design tools and a movement toward a design build approach and (2) product modeling.

Engineering man-hours reflected total effort with the exception of the SSN-688 and CVN-68, where study authors believed that a significant amount of Research, Development, Test, and Evaluation (RDT&E) funded effort was missing. The study analyzed actual data from 20 ship classes, ranging from aircraft carriers to support ships. There were 24 lead ships and 18 follow ships in the study.

The following cost estimating relationships (CER) were developed:

- Production Man-hours = *f* (Light Ship Weight, Lead or Follow, Follow Yard, Modification or Repeat, Nuclear, Group 900 Lead or Follow factor, Complexity).
- Complexity = *f* (Ship Type, Density, Combat System Ratio)

The study concluded that the top-level ship production man-hour estimating methodology provides a good cross-check or a rough-order-of-magnitude estimate and recommended that it be used early in a ship's life-cycle (e.g., the concept phase) when few details are known.

2.4.3 STRENGTHS AND WEAKNESSES

This study provides top level methodology for quick cross check or ROM for ICA and is recommended to be used for milestone A and AoA studies. A weakness is that study excludes SWBS 800 cost where most of the ship integration cost is included and is substantial for lead ship. In addition, the study does not cite the primary data sources, only secondary derivative sources, and there is no detailed study report available to validate the analysis, only a PowerPoint brief.

2.5 "SHIPBOARD SYSYTEM INTEGRATION (SSI) COST ESTIMATING METHODOLOGY", NCCA, OSD, 2002, 2005

This two-phase study was completed in 2002 and 2005. It was jointly funded by NCCA and the OSD CAIG. Gibbs and Cox, Inc. (a naval architecture firm), Lockheed Martin Corporation/Moorestown (a shipboard combat system provider and integrator), and Technomics, Inc. (a cost analysis firm) teamed to conduct the research. Phase 1 was delivered in 2002 and concentrated on determining the definition and components of integration and the collection of the Aegis Combat System data. Phase 2, completed in 2005, expanded the research to include collecting data on other ship combat systems and developing cost estimating methodologies for estimating the cost to integrate Electronics (Ship Work Breakdown Structure (SWBS) 400) and Armament (SWBS 700) into naval surface ships.

The study addressed both lead-ship and follow-ship integration and defined three cases:

- Case A - The integration of a new combat system onto a new platform, e.g., the Virginia Class submarine (SSN 774), as shown in Figure 1;

- Case B - The integration of a previously integrated combat system onto a new platform, e.g., the Ship Self-Defense System (SSDS) onto the LPD 17 Class, as shown in Figure 2; and,
- Case C - The integration of sequential combat system baselines, e.g., Aegis on the DDG 51 Class.

For the purpose of this study, SSI is defined to include the nonrecurring and recurring effort required to: (1) Analyze, design, and develop the system-to-system (e.g. the Cooperative Engagement Capability (CEC) System to SSDS); and system-to-ship (e.g. SSDS to LPD-17) interfaces; (2) Prepare drawings and establish equipment requirements and specifications; and (3) Plan and conduct Test and Evaluation (T&E). Note that, though SSI is generally considered nonrecurring in nature, there are specific T&E activities (e.g. conducting tests and analyzing data) that are appropriately recurring cost.

2.5.1 DESCRIPTION OF DATASET

Data was collected methodologies developed for estimating the cost to integrate Electronics (SWBS 400) & Armament (SWBS 700) into naval surface ships. The principal data sources were:

- LPD-17 SEA 017 issued papers and cost estimates
- DDG-51 SEA 017 recurring integration costs for the three FY2000 ships
- Virginia Class Submarine Program Office (PMS 450) technical characteristics and cost data for both the SSN-774 and the first three follow-ships

The team used the following WBS structure to map costs data.

	Cost Data Source				
	SB	CSI			
SSI WBS	Detail Design / Construction Contracts	Development Contracts	Production Contracts	SII&T Contracts	Government Agencies
Integration Engineering	X	X		X	X
Software Development		X		X	X
Test & Evaluation					
Land-Based		X	X	X	X
Shipboard	X			X	X
Program Management	X	X	X	X	X

SSI activities resulted in the identification of four types of contractual efforts during which SSI costs are incurred. These included: (1) shipbuilder SWBS 800 man-hours; (2) Continuing System Improvement (CSI) Development Contracts; (3) CSI Production Contracts; and (4) CSI Ship Integration, Installation and Test (SII&T) Contracts.

SSI government cost includes potential cost drivers: (1) numbers of Software Lines of Code (SLOC); (2) functions, interfaces, drawings, hardware elements, and test requirements; and (3) hardware unit production cost.

The collected cost includes the nonrecurring and recurring effort required to analyze, design and develop the system-to-system and system-to-ship interfaces, prepare drawings and establish equipment requirements and specifications, plan and conduct system T&E. These tasks are typically performed by multiple organizations such as OEM, private and public shipyards and other government organizations at different locations. These tasks can occur as a forward-fit activity during new ship construction & a back-fit activity on an existing ship platform during ship modernization or overhaul.

2.5.2 DESCRIPTION OF CERS

The authors assembled a system integration cost database. Three methods were developed for lead-ship integration costs.

- **Method 1**: Estimates SSI using Equivalent New Source Lines of Code (ESLOC) and was developed using Virginia Class (SSN-774) actual costs
- **Method 2**: Estimates SSI costs as a factor of software development costs.
- **Method 3**: Use a set of Cost Estimating Relationships (CERs). It provides estimates by activity (e.g., integration and test, test and evaluation, etcetera) and is sensitive to the individual size and number of systems being integrated.

Two methods were developed for estimating follow-ship SSI costs.

- **Method 1:** Uses delivered SLOC and is based on actual Virginia Class SSI costs.
- **Method 2:** Uses both combat system weight and actual SSI costs for the Virginia Class Submarine, LPD-17, and DDG-51 classes.

Depending on the method used, the main cost drivers were identified as number of CS elements, interfaces, functions, drawings, production cost of hardware, SLOC, schedule, integration environment (FF vs BF), year of development (~ technology), integration iteration (~ learning ESLOC), Integration & Test costs, and Test & Evaluation costs. The data analysis revealed that, as SLOC increased, the cost would increase non-linearly.

The resulting CERs for lead ship integration are as follows:

- **Method 1:** Uses analogies

  SSI $ = *f* (analogous SSI cost, estimated ESLOC, and analogous ESLOC)

- **Method 2:** Uses factors

  SSI $ = *f* (front-end % and back-end %, rework factor, Basic Software Development Cost Estimate)

- **Method 3:** Uses cost estimating relationship

  SSI $ = *f* (I&T $, T&E $, PM $, SE $, ILS $)

  where

  I&T = Integration and Test

T&E = Test and Evaluation

PM = Program Management

SE = Systems Engineering

ILS = Integrated Logistics Support

I&T$ = *f* (SW$) or I&T$ = *f* (SW$) & *f* (NRHW$)

where

SW = Software $

NRHW = Non recurring hardware $

$I\&T\$_{CS} = I\&T\$\ Systems_{(A+B)} - (I\&T\$_{System\ A} + I\&T\$_{System\ B})$

Where,

I&T$ CS = Combat System Integration and Test Cost

A and B represent individual Systems within a combat System

$T\&E\$ = f(I\&T\$_{CS})$

$PM\$, SE\$, \text{ and } ILS\$ = f(I\&T\$_{CS}, T\&E\$)$

The resulting CERs for follow-ship integration are as follows:

- **Method 1:** Uses delivered SLOC analogy

  $SSI\ \$ = f(A\ SSI_A\ \$, SLOC_B, SLOC_A)$

  Where

  A = Known system

  B = Unknown system

- **Method 2:** Uses combat system weight analogy

  SSI $ (FY05$M) = *f* (C, SWBS 400 Wt, SWBS 700 Wt)

  where

  Wt = Weight in long-tons (LT)

  C = SSI cost of the analogous system

The study addressed both lead and follow-ships and developed multiple cost estimating methodologies for each. When possible, it is recommended that multiple approaches be applied.

2.5.3 STRENGTHS AND WEAKNESSES

This study provides multiple methods of estimating ship integration costs for lead ships by using ESLOC, a factor of SW development cost, and build up using I&T, T&E, PM, SE, and ILS cost. Similarly, it provides two methods for estimating SSI for follow ships such as DSLOC and combined weight of SWBS 400 and SWBS 700.

Method 3 for lead ship integration develops cost estimates of support efforts and then uses those estimates as independent variables for SSI.

2.6 "SURFACE COMBATANT PERFORMANCE BASED COST MODEL (PBCM)", NSWC, 2012

This model was originally developed by the Naval Surface Warfare Center, Carderock Division (NSWCCD) in the early 2000s and was recently updated by NSWCCD and Technomics, Inc.

This study focused on relating the performance of a surface combatant ship to its cost. In order to build the model, a robust database of surface combatant performance characteristics (e.g., weight, propulsion type, and et cetera), technical parameters, and costs was first assembled. Following that, equations were developed to estimate the weights for each SWBS group and some of the other technical parameters.

2.6.1 DESCRIPTION OF DATASET

The principal data sources were compilations of historical surface shipbuilding program data, including:

- NAVSEA 05C Information Management System (the primary source was not provided)
- Weight Control of Naval Ships, Vol. II (U)
- ASSET Master Payload List
- Ship Construction Cost and Technical Database (NCCA)

- PR-09 Department of the Navy Budget Justifications
- Naval Vessel Register (NVR)
- Other open source such as www.globalsecurity.org and www.fas.org

2.6.2 DESCRIPTION OF CERS

The collected cost data was normalized and CERs were developed to estimate the costs (SWBS 100-900) of surface combatant ships. All of these equations were built into an Excel model and calibrated by actual cost of analogous ships. This model could estimate the cost of a surface combatant ship based on only a few performance inputs. The CER cost drivers are weight, propulsion type and superstructure material.

Total cost (TC) of N units of a system with unit cost Cu is TC=N*Cu

Nominal average unit cost of the system (ship or submarine) is a function of performance, physical characteristics (weight), technology, economic and programmatic factors expressed as follows: $Cu = f(P, W, T, \varepsilon(N))$

where

Cu = Unit cost.

P = Performance characteristics

W = Physical characteristics

T = Technology characteristics

ε = Economic and programmatic factors and may depend on N

N= Number Of Ships procurement

System effectiveness, represented by Measures of Effectiveness (MOE) is a function of system performance, number of systems, jointly operating systems if any, and the characteristics of the threat:

$MOE = f(P,N,J,\Theta)$

where

P = Performance characteristics

J = Jointly operating systems

Θ = Threat characteristics

N= Number of Ships Procured and Deployed

Ship structure is the most fundamental characteristic on a ship and is the foundation for everything else. The structure provides the envelope that contains all other subsystems and provides the strength to support itself along with all other systems. The principal drivers of structure, as measured by weight, are the other systems on the ship, and the overall ship size, as measured by length, beam, and surface area. The resulting relationship for structural weight is as follows:

Hull Structure Weight (W_{100}) = f (W_{200}, W_{300}, W_{400}, W_{500}, W_{600}, W_{700}, W_{Loads})

Propulsion System Weight (W_{200}) = f (SHP, P_{gas}, P_{IPS}, Psteam)

where

SHP = Horsepower delivered to the shaft

P_x = Propulsion of type X

Electrical System Weight (W_{300}) = f (MW, P_{gas}, P_{IPS}, P_{steam})

where

MW=Ship Service Factor

Command and Surveillance Weight (W_{400}) = W_{400} Given (Input)

Auxiliary System Weight W_{500} = f (W_{100}, P_{gas}, P_{IPS})

where

P_x = Propulsion plant of type X

Outfit and Furnishing Weight W_{600}= f (W_{100}, N_Complement)

where

N_Complement = Number of Sailors (Officers and enlisted) per ship

Armament weight W_{700}= W_{700} Given (input)

The cost equations developed are as follows:

$C_{100} = f\,(W_{100}, \text{Superstructure}_{composite})$

$C_{200} = f\,(W_{200}, P_{steam}, P_{gas}, P_{IPS})$

$C_{300} = f\,(W_{300}, P_{steam}, P_{gas}, P_{IPS})$

$C_{400} = f\,(W_{400})$

$C_{500} = f\,(W_{500}, P_{steam}, P_{gas}, P_{IPS})$

$C_{600} = f\,(W_{100})$

$C_{700} = f\,(W_{700})$

Engineering Cost $C_{800} = f\,(C_{100}, C_{200}, C_{300}, C_{400}, C_{500}, C_{600}, C_{700})$

Assembly and Support Cost $C_{900} = f\,(C_{100}, C_{200}, C_{300}, C_{400}, C_{500}, C_{600}, C_{700})$

where

C_x is the cost group X and W_x is the weight group X

$Superstructure_{composite}$ is whether the ship's structure is composite or not

2.6.3 STRENGTHS AND WEAKNESSES

PBCM is an early stage ROM costing tool focused on relating cost to performance. It is an Excel based model that is flexible, estimates cost based on performance and simultaneously estimates major physical characteristics. It is valuable in AoA and trade studies and calibrated for surface combatants. The major weakness is that PBCM is dated and is based on historical surface combatant data that needs to be updated with other naval ships cost data, detailed load data, mission systems, GFE and ship end-cost actuals and budget data.

2.7 "SUBMARINE PERFORMANCE BASED COST MODEL (PBCM)", NSWC, NAVSEA 2011

This model was originally developed by the Naval Surface Warfare Center, Carderock Division (NSWCCD) in the early to mid-90s. The model was updated by Technomics, Inc. in 2011 for NAVSEA.

A PBCM is a parametric cost model in combination with a parametric engineering or technical model that simultaneously estimates major physical characteristics and cost as functions of major

performance requirements and/or other specified factors. For submarines this includes speed, operating depth, quietness, weapons capacity, and et cetera. However, in order to relate cost to performance at a sufficient level of detail and accuracy, the PBCM must also relate the principal physical characteristics of the submarine (weights, materials, power, and et cetera) to performance characteristics and use both physical and performance characteristics that drives cost.

2.7.1 DESCRIPTION OF DATASET

In order to build the model, a database of submarine performance characteristics, technical parameters, and costs was assembled. The principal data sources were compilations of historical submarine program data, including:

- Weight Control of Naval Ships, Vol. II (U), classified document, (NAVSEA, 2005)
- NAVSEA Submarine Data Book (U), classified document (NAVSEA, 1983)
- NAVSEA 05C Information Management System (primary data sources not provided)
- Naval Vessel Register (NVR)
- PR-09 Department of the Navy Budget Justifications

2.7.2 DESCRIPTION OF CERS

Equations were developed to estimate the weights for each Ship Work Breakdown Structure (SWBS) group and some of the other technical parameters. The cost data was normalized and CERs were developed to estimate the costs by a submarine's SWBS. All of these equations were built into an MS Excel model and can be calibrated with the cost of analogous ship.

This study delivered a model that can estimate both the technical characteristics and the cost of a submarine, given only a few performance inputs. The model's output is in the form of CERs. Unfortunately, the technical and performance characteristics (weight, quieting time, ballistic missiles, ship service power, shaft horsepower, complement, and etcetera) are classified, so the CERs are also classified. The model is resident at and controlled by NSWCCD 8110, where it is usable only within a classified facility.

This study recommends that, when possible, the model be used as an early stage rough order of magnitude cost estimating tool, supplement to standard concept design and cost estimating methods during analysis of alternatives (AoA) cost estimates.

2.7.3 STRENGTHS AND WEAKNESSES

This is one of the few models the Navy has access to that enables cost estimates be developed along with the other technical information so real-time decisions can be made in the design process.

A major weakness with the model is that it is classified and must be used in a classified facility.

2.8 "ADVANCES IN AIRCRAFT CARRIER LIFE-CYCLE COST ANALYSIS FOR ACQUISITION AND OWNERSHIP DECISION MAKING", NAVSEA, 2001

The paper is an overview of the Life-Cycle Cost (LCC) analysis developed by NAVSEA 017 to support Analysis of Alternatives (AoA) studies for the next generation aircraft carriers. The paper was presented at the 2001 Society of Cost Estimating and Analysis /International Society of Parametric Analysis (SCEA/ISPA) National Conference.

The Expanded Ship Work Breakdown Structure (ESWBS) is the central backbone of the cost work breakdown analysis, as it describes the ship by ship system. The approach provides a breakdown of the Operating and Support (O&S) cost elements by ESWBS.

Total Ownership Cost includes all costs associated with the research, development, procurement, operation, logistical support and disposal of a weapon system, including the total supporting infrastructure that plans, manages, and executes the program over its full life.

The LCC database and cost structure analysis was instrumental in addressing the ~70 ship design study options and well over 100 new technologies. The key issues addressed in various studies were:

- Air-wing Size and Aircraft Type-Short Take-Off and Vertical Landing (STOVL) aircraft. This would permit the elimination of catapults and arresting gear and allow reduction in the size of the flight deck.

- Propulsion alternatives- Nuclear and non-nuclear propulsion alternatives such as gas turbine, diesel, and steam with mechanical or electric drive. Nuclear propulsion will introduce a substantial increase in electrical power generation capacity. The greater electrical power capacity will enable significant reduction in total ownership costs by eliminating steam catapults and replacing them with an electromagnetic aircraft launching system.
- Flight deck design with the incorporation of a "pit-stop" aircraft handling concept, Electromagnetic Aircraft Launching System (EMALS) and Electromagnetic Aircraft Recovery System (EARS).

2.8.1 DESCRIPTION OF DATASET

Historical cost data from the different sources were collected on current NIMITZ class aircraft carriers by 3rd level ESWBS, where applicable, to understand the cost drivers and opportunity for improvement. The following figure summarizes data collection effort and scope.

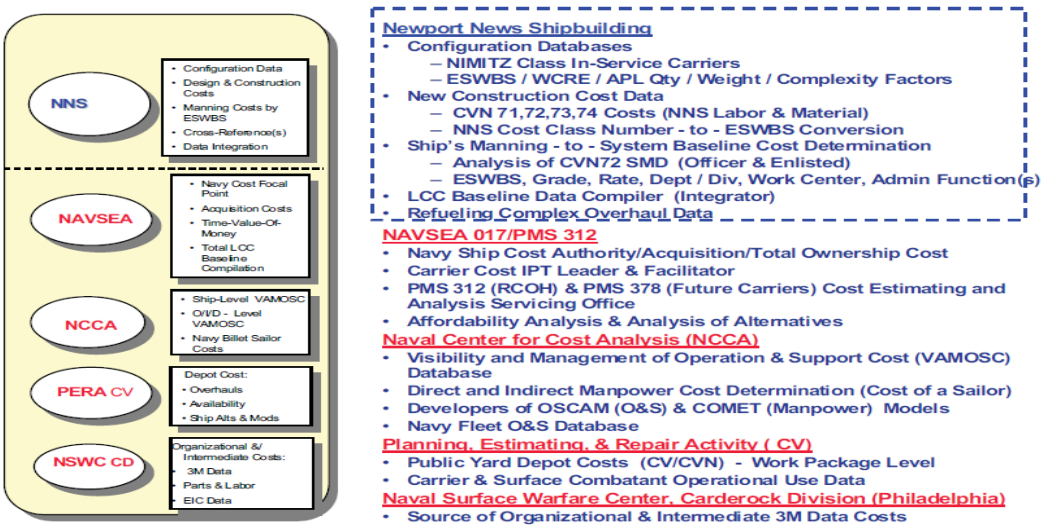

A structured and comprehensive life-cycle cost database and cost modeling approach was established that enables better informed decisions regarding economic consequences. The cost model framework developed integrates over 10 million data items that can be accessed as source data and sorted in various ways to concentrate on particular ship systems and cost drivers. The database framework and methodology identifies aircraft carrier cost drivers comprehensively through the life-cycle and is setup for design trade-off analysis using cost as an independent

variable. This new database and methodology was utilized to develop the implementation of the transition technology, the requirements setting process and the AoA for future carrier planning, and will be a key instrument in identifying and achieving cost reduction goals in aircraft carrier ownership.

2.8.2 DESCRIPTION OF CERS

This paper does not provide any CERs. It describes the cost analysis that was done for the various design studies completed for the next generation aircraft carrier program. It does provide an analysis of Nimitz class cost drivers for procurement and O&S phases.

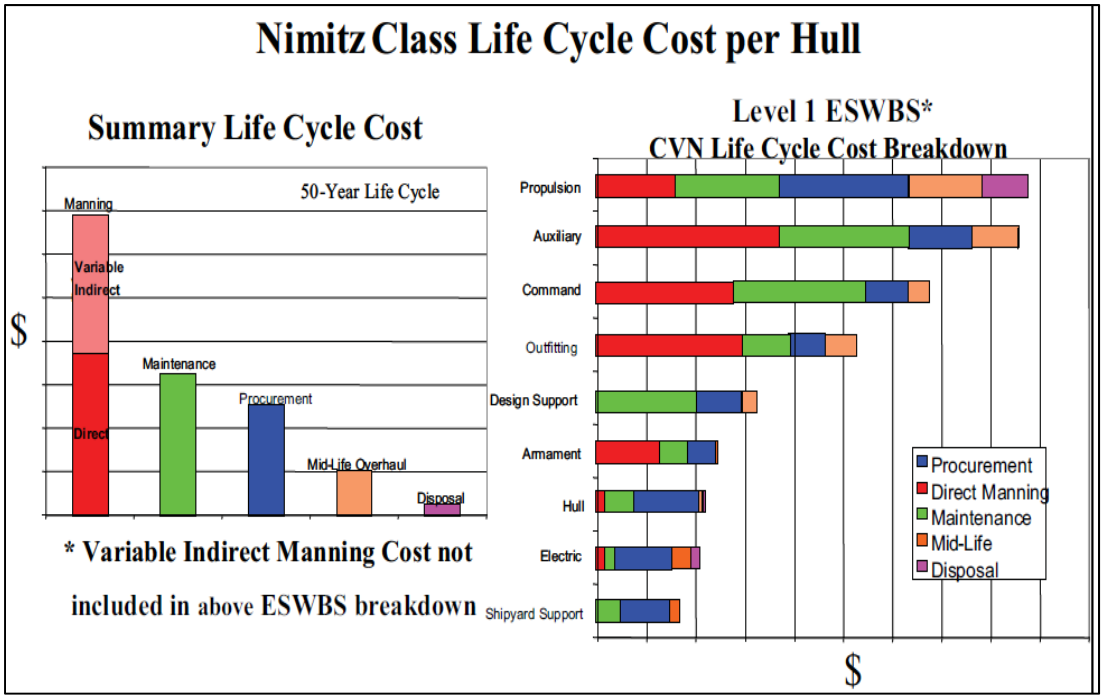

As shown in charts above, O&S is a major cost driver for the aircraft carrier. Aircraft carriers have a 50-year life expectancy and the cost impacts of given changes, insertions of technologies, cost reduction initiatives, et cetera was evaluated for their influences over the long haul of a total class of ships. The analysis includes the incorporation of a revised maintenance cycle.

2.8.3 STRENGTHS AND WEAKNESSES

Key strengths of this study include that all elements of cost are included and well understood. This knowledge had manifested in cost-conscious decision making starting with the requirements

setters and carrying through to every aspect of program management and execution. Also, the study provided an approach for business decision analysis and techniques on comparing cost across life-cycle.

The weakness is that the reader is not provided with access to the data being used in the analysis. Also, CERs developed as part of the study are not included.

2.9 "CHANGING AIRCRAFT CARRIER PROCUREMENT SCHEDULES: Effects That a Five-Year Procurement Cycle Would Have on Cost, Availability, and Shipyard Manpower and Workload", RAND, 2011

In the mid-1990s, there were 15 aircraft carriers in the Navy fleet; at the time of the study, there were 11. In 2009, the Secretary of Defense announced plans to shift the Navy aircraft carrier acquisition program to extend the cycle for acquiring a new aircraft carrier from approximately every four years to five years. It will have an effect on the acquisition of the Ford Class of aircraft carriers. And in the long run, this could have the effect of reducing the number of fielded aircraft carriers to 10 by 2040, affecting the Navy's ability to meet forward-presence goals.

The Program Executive Office for Aircraft Carriers asked RAND to identify the potential costs, schedules, and risks associated with the new five-year build plan. The study summarizes RAND findings regarding the future aircraft carrier force, the shipyard and vendor workforces, and the public shipyards providing aircraft carrier maintenance.

2.9.1 DESCRIPTION OF DATASET

The primary data sources are: the Program Executive Office (PEO) Carriers; Northrop Grumman Shipbuilding, Newport News (NGSB-NN); and major vendors supporting aircraft carrier construction and maintenance.

To determine the effects on the force structure, Nimitz Class and Ford Class operating/ maintenance data was collected from the August 2008 30-year Ship Building Plan (SPB) and the proposed five-year plan from April 2009. A seven-year build period and a 50-year lifespan was assumed including a midlife RCOH.

The study collected current and projected future workloads start and end dates for each project and the number of full-time equivalent (FTE) personnel, demographics, and skill categories by each quarter of the project. The general workforce data include labor rates, hiring and training costs, termination costs and normal attrition rates by skill category. The data also includes worker learning and loss of learning due to production gap. Data was used to develop the labor-force model to estimate future workforce levels by skill and the direct and indirect costs of projected future workloads.

The force-structure, including the number of aircraft carriers in the force and the ability to meet presence, was modeled from fleet availability based on maintenance/ training/ deployment data collected for the 30 year Ship Building Plan (SBP). Labor Force Impact was plotted using labor models by skills for the SBP.

2.9.2 DESCRIPTION OF CERS

There are no CERs in this study.

2.9.3 STRENGTHS AND WEAKNESSES

The strength of this study is an independent assessment of available data from Navy and contractor sources. The historical actual data on Nimitz class is compared with estimated Ford class data based on design assumptions that need to be validated.

The key weakness of the study is the failure to address planned process improvements, automation and productivity actions through the SBP.

2.10 "AN APPLICATION OF DATA MINING ALGORITHMS FOR SHIPBUILDING COST ESTIMATION", NATO, 2011

This study was completed by The North Atlantic Treaty Organization (NATO) independent cost estimating panel in 2011 to understand how NATO countries conduct cost estimation and demonstrate practicality of NATO cost estimation guidelines. The team analyzed Her Netherlands Majesty's Ship (HNLMS) Rotterdam Landing Platform Dock (LPD), an amphibious transport dock ship. Netherland withheld actual ship cost to compare the actual costs against the developed cost estimate.

2.10.1 DESCRIPTION OF DATASETS

Analogous technical and cost data for 59 ships in 18 classes from seven nations commissioned from 1954 to 2010 were collected. For each ship, over 100 descriptive and technical ship attributes were obtained, encompassing dimensions, performance, power generation, lift capacity, armament & countermeasures, sensors, combat & weapon control systems, and etcetera. For cost comparison and analysis, development and production cost data in various currencies were converted to single currency.

A total of 136 descriptive, technical, and cost attributes per ship were collected as shown below.

	Category	Number of Attributes
I	DESCRIPTION	6
II	CONSTRUCTION	8
III	DIMENSIONS	5
IV	PERFORMANCE	8
V	PROPULSION	9
VI	ELECTRICAL POWER GENERATION	3
VII	LIFT CAPACITY	35
VIII	FLIGHT DECK	19
IX	ARMAMENT	13
X	COUNTERMEASURES	5
XI	RADARS / TACAN / IFF / SONARS	13
XII	COMBAT DATA SYSTEMS	1
XIII	WEAPONS CONTROL SYSTEMS	1
XIV	OTHER CAPABILITIES	7
XV	COST DATA	3

The military or civilian auxiliary vessels of similar size and function to Rotterdam Class ships included in this study are shown below:

Name	Number	Type	Rank	Commissioned	Country
Thomaston	LSD 28	LSD	1	1954	United States
Plymouth Rock	LSD 29	LSD	2	1954	United States
Fort Snelling	LSD 30	LSD	3	1955	United States
Point Defiance	LSD 31	LSD	4	1955	United States
Spiegel Grove	LSD 32	LSD	5	1956	United States
Alamo	LSD 33	LSD	6	1956	United States
Hermitage	LSD 34	LSD	7	1956	United States
Monticello	LSD 35	LSD	8	1957	United States
Anchorage	LSD 36	LSD	1	1969	United States
Portland	LSD 37	LSD	2	1970	United States
Pensacola	LSD 38	LSD	3	1971	United States
Mount Vernon	LSD 39	LSD	4	1972	United States
Fort Fisher	LSD 40	LSD	5	1972	United States
Whidbey Island	LSD 41	LSD	1	1985	United States
Germantown	LSD 42	LSD	2	1986	United States
Fort McHenry	LSD 43	LSD	3	1987	United States
Gunston Hall	LSD 44	LSD	4	1989	United States
Comstock	LSD 45	LSD	5	1990	United States
Tortuga	LSD 46	LSD	6	1990	United States
Rushmore	LSD 47	LSD	7	1991	United States
Ashland	LSD 48	LSD	8	1992	United States
Harpers Ferry	LSD 49	LSD	1	1995	United States
Carter Hall	LSD 50	LSD	2	1995	United States
Oak Hill	LSD 51	LSD	3	1996	United States
Pearl Harbour	LSD 52	LSD	4	1998	United States
Raleigh	LPD 1	LPD	1	1962	United States
Vancouver	LPD 2	LPD	2	1963	United States
La Salle	LPD 3	LPD	3	1964	United States
Austin	LPD 4	LPD	1	1965	United States
Ogden	LPD 5	LPD	2	1965	United States
Duluth	LPD 6	LPD	3	1965	United States
Cleveland	LPD 7	LPD	4	1967	United States
Dubuque	LPD 8	LPD	5	1967	United States
Denver	LPD 9	LPD	6	1968	United States
Juneau	LPD 10	LPD	7	1969	United States
Coronado	LPD 11	LPD	8	1970	United States
Shreveport	LPD 12	LPD	9	1970	United States
Nashville	LPD 13	LPD	10	1970	United States
Trenton	LPD 14	LPD	11	1971	United States
Ponce	LPD 15	LPD	12	1971	United States
Svalbard	W303	Icebreaker	1	2001	Norway
Carlskrona	M04	LPD	1	1982	Sweden
Atle	—	Icebreaker	1	1985	Sweden
Oden	—	Icebreaker	1	1989	Sweden
Protecteur	AOR 509	AOR	1	1969	Canada
Preserver	AOR 510	AOR	2	1970	Canada
Albion	L14	LPD	1	2003	United Kingdom
Bulwark	L15	LPD	2	2005	United Kingdom
Largs Bay	L3006	LSD	1	2006	United Kingdom
Lyme Bay	L3007	LSD	2	2007	United Kingdom
Mounts Bay	L3008	LSD	3	2006	United Kingdom
Cardigan Bay	L3009	LSD	4	2006	United Kingdom
Ocean	L12	LPH	1	1998	United Kingdom
Siroco	L9012	LSD	2	1998	France
Mistral	L9013	AAS	1	2006	France
Tonnerre	L9014	AAS	2	2007	France
Dixmude (BPC3)	L9015	AAS	3	2010	France

2.10.2 DESCRIPTION OF CERS

This study uses the M5 Model Tree Algorithm to incorporate a multitude of cost drivers in a cost estimate. The M5 Model Tree combines attributes of decision tree analysis and linear regression by representing each node of the decision tree as a multivariate linear regression model. M5 model trees work when data is limited and can handle datasets with differing variable types (nominal or numeric).

The figure below depicts a simple example of a M5 model tree. The sub-figure on the left shows a two-dimensional space of independent variables x1 and x2. The algorithm divides the space into regions corresponding to decisions in the tree shown on the right, and then the data in each region are fitted to linear regression models (LM). To predict a value for a new instance, the M5 model tree is traced down to a node using the instance's attribute values in make routing decisions at each node. The node contains a linear regression model based on a subset of the attributes, and this is then evaluated for the new instance to output a predicted value.

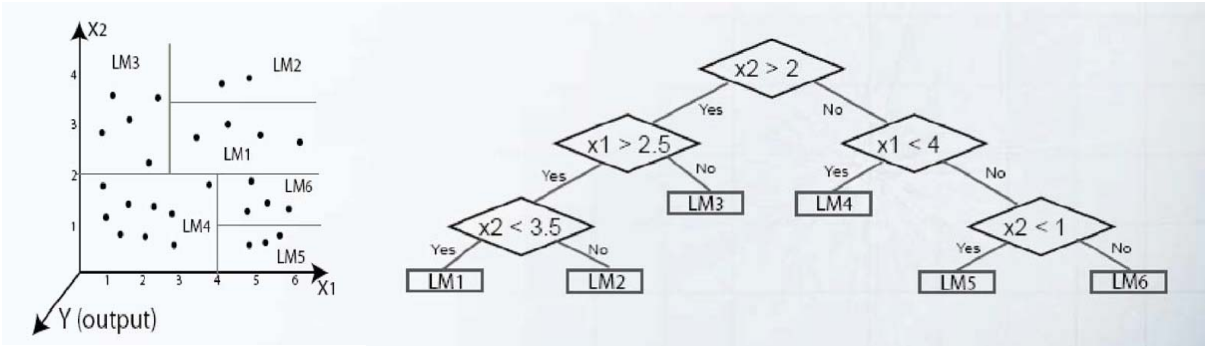

The model tree for the SAS-076 Ship Data Set divides the ships in groups based on the variables presented in the linear model below.

Log (cost) = *f* (LCAC + TD + RC + HS + L+D)

where

LCAC = the number of Air-Cushioned Landing Craft (LCAC) that the ship can carry

TD = number of torpedo decoy systems on board

RC = the ship's rank in class

HS = the maximum number of helicopters supported

L = the ship's length

D = the ship's range in terms of total distance (nautical miles)

The model tree has nine branches for these variables with nine corresponding linear regressions provided in the figure below.

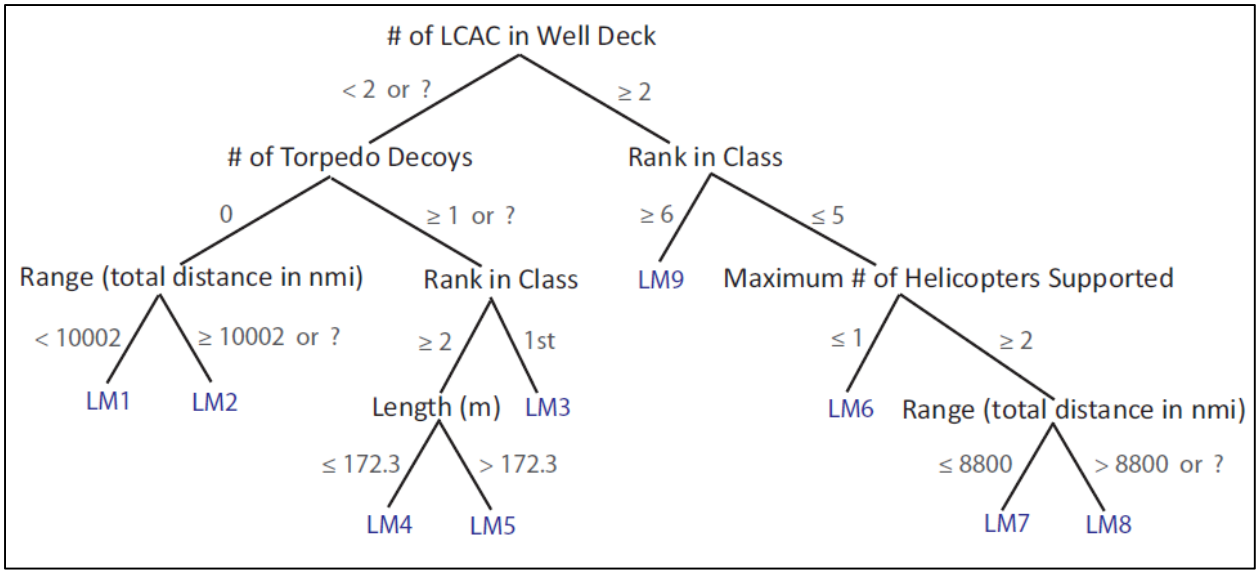

The ships and their categorization into nodes that resulted from this dataset are provided in the table below.

LM1	LM2	LM3	LM4	LM5	LM6	LM7	LM8	LM9
Svalbard	Carlskrona	Thomaston	Plymouth Rock	Lyme Bay	Anchorage	Whidbey Island	Raleigh	Tortuga
Protecteur	Atle	Largs Bay	Fort Snelling	Mounts Bay	Portland	Germantown	Vancouver	Rushmore
Preserver	Oden	Ocean	Point Defiance	Cardigan Bay	Pensacola	Fort McHenry	La Salle	Ashland
			Spiegel Grove		Mount Vernon	Gunston Hall	Mistral	Denver
			Alamo		Fort Fisher	Comstock	Tonnerre	Juneau
			Hermitage		Harpers Ferry	Austin	Dixmude (BPC3)	Coronado
			Monticello		Carter Hall	Ogden		Shreveport
			Siroco		Oak Hill	Duluth		Nashville
					Pearl Harbour	Cleveland		Trenton
						Dubuque		Ponce
						Albion		
						Bulwark		

The LM7 node showed to contribute the greatest to the standard deviation. To further analyze this influence, the ships categorized under LM7 were refitted to the variable branches for LM7: the number of LCACs, rank in class, maximum number of helicopters supported, and ship's range; which resulted in the following CER:

$$\text{Log (cost)} == f\,(\text{LCAC+RC})$$

The study discusses a second method to estimate cost using multiple analogous systems rather than just one by grouping similar systems together using hierarchical cluster analysis. The

hierarchy of clusters is determined by the size of the cluster: small clusters of very similar items to large clusters of more dissimilar items. Hierarchical cluster analysis begins by finding two systems that are most similar based on a matrix of distances among systems and merges the systems into a single group. This is repeated until all the systems have been joined into a single large cluster. The resulting clusters can be used to estimate the cost of a new system by taking a weighted average of the cost of historical systems based on the relative distance between the new system and the historical system.

The optimal allocation of weights is then determined by minimizing the prediction error for the known ships. Principal Component Analysis (PCA) was used to reduce the number of attributes in this dataset (originally 123 attributes) to 16 macro-attributes for determining the weights. The 16 macro-attributes were reduced further to the top ten accounting for 80% of the original dataset's variance. The study provides the weighted distances resulting from hierarchical cluster analysis of the Rotterdam LPD to ships in the Rotterdam dataset.

2.10.3 STRENGTHS AND WEAKNESSES

The strength of the study is that it presents alternate methods to developing CERs using advanced statistical algorithms in data mining. In addition, this study proves that sub-setting the data can result in CERs with better statistics than a full dataset. Although the study provides favorable results, the weakness of this study is that the proposed methods are data intensive relative to the number of available data points.

2.11 "INCREMENTAL WEIGHT AND COST MODEL", Northrop Grumman Corporation, 2005

The purpose of this paper and follow-on briefing was to describe a model that would provide cost and weight estimates for trade-off analyses early in the design cycle of a ship. Via Ship Work Breakdown Structure (SWBS) level analysis, the weight based model determines the weight and cost of potential ship designs that may provide improvements in cost, weight, or performance criteria. The model takes into consideration the impacts of individual systems on the entire ship.

2.11.1 DESCRIPTION OF DATASET

Historical weight and cost data from cruisers, destroyers, and corvettes was used to develop weight, and labor and material CERs.

2.11.2 DESCRIPTION OF CERS

No CERs were provided in this study; however, the cost drivers were provided as first, second, third, and fourth order effects.

The study showed that there were four parameters of the ship that drive weight and cost:

1. Shaft horsepower - power delivered to the driving shaft of an engine, measured in megawatts. There is a proportional relationship between shaft horsepower and propulsion components since shaft horsepower value would increase to meet an increase in propulsion requirements.
2. Command and surveillance capability – the exterior communications, Identification Friend or Foe (IFF) systems, surface search radar, degaussing systems, fire control systems, alarm and warning systems, navigational equipment, and interior communications. Command and surveillance weight is a direct input into the model.
3. Complement – the full crew of officers and enlisted personnel required to operate a ship and undertake its mission. The weight for Outfitting & Furnishings affects the model proportionally by the number of officers and enlisted personnel on the ship.
4. Armament capability – includes guns, light arms and pyrotechnic launching devices, missile and rocket stowage, missile and torpedo launchers, and vertical launch cells. Armament weight is a direct input into the model.

Of the four main cost drivers, Command and Surveillance, Complement, and Armament were the cost drivers that were identified to be direct inputs (weight) into the model; in other words, the first order effects. The figure below shows the relationships of the cost drivers and the 1st through 4th Order Effects.

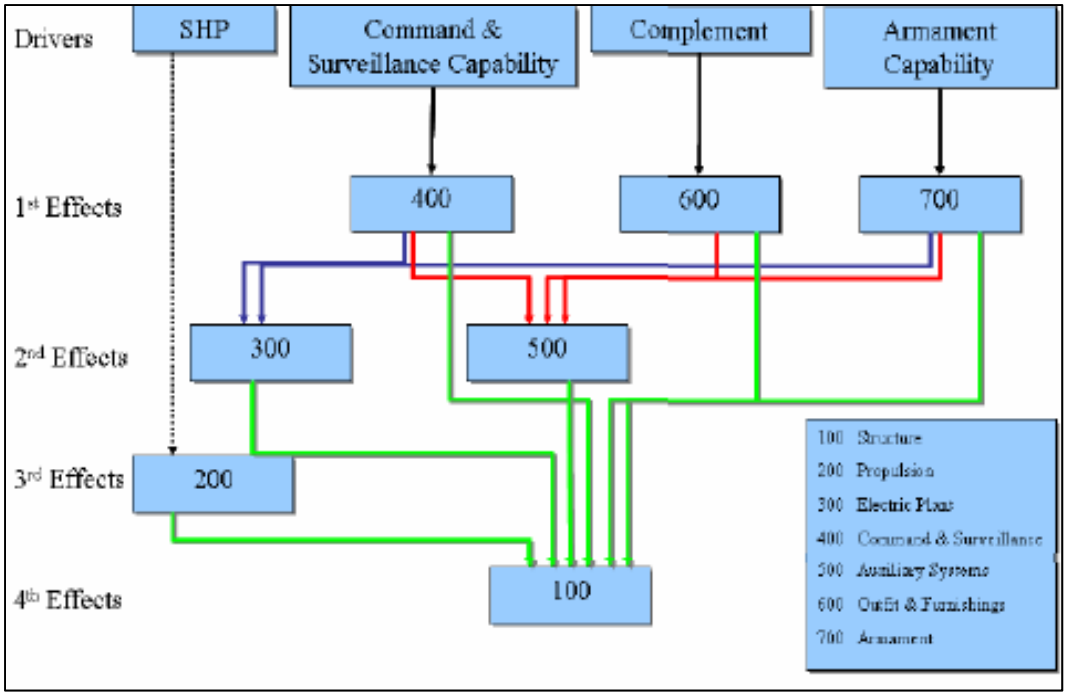

Electric plant includes the ship service power generation equipment, power distribution system, some lighting systems and electrical cable, and general electric plant equipment. The Auxiliary systems includes refrigeration, air condition, compressed air, ventilation, heating and sea water systems, the distillation plant, and potable water equipment.

Structure is the fourth order effect and includes the hull structural closings, foundations, hangar doors, masts, and towers. The hull is affected by the amount of what needs to be contained in the ship. As the components increase, the hull increases.

Adjustment factors were applied to the model to account for materials used for the hull and superstructure differing from the historical dataset. The model also incorporates adjustment for learning into the labor cost estimates.

2.11.3 STRENGTHS AND WEAKNESSES

The model was built with using known cost drivers and incorporates flexibility to allow the analyst to easily use their own parameters with this model. The main weakness of this model is that the model is still in the early stages of development, not considering impacts to Production

Engineering and Construction Services. Both areas were planned for further analysis. Also, this study merely describes the cost drivers, the model was not provided in the study.

ACQUISITION CONCLUSION

The following table summarizes the elements addressed in the studies reviewed.

Study / ESWBS Group	THE DEFENSE AUTOMATED COST INFORMATION MANAGEMENT SYSTEM (DACIMS)	INFORMATION MANAGEMENT SYSTEM (IMS)	NAVSEA 05C SHIPBUILDING INDICES	SHIP PRODUCTION MAN-HOUR ESTIMATING METHODOLOGY	SHIPBOARD SYSYTEM INTEGRATION (SSI) COST ESTIMATING METHODOLOGY	SURFACE COMBATANT PERFORMANCE BASED COST MODEL (PBCM)	SUBMARINE PERFORMANCE BASED COST MODEL (PBCM)	ADVANCES IN AIRCRAFT CARRIER LIFE CYCLE COST ANALYSIS FOR ACQUISITION AND OWNERSHIP DECISION MAKING	CHANGING AIRCRAFT CARRIER PROCUREMENT SCHEDULES	AN APPLICATION OF DATA MINING ALGORITHMS FOR SHIPBUILDING COST ESTIMATION	INCREMENTAL WEIGHT AND COST MODEL
MCC 100 Construction Plans	X	X	X								
MCC 200 Basic Construction	X	X				X	X	X	X	X	X
SWBS 100 Hull Structure	X	X	X	X		X	X				X
SWBS 200 Propulsion	X	X		X		X	X				X
SWBS 300 Electric Plant	X	X		X		X	X				X
SWBS 400 Command & Surveillance	X	X		X	X	X	X				X
SWBS 500 Auxilary Systems	X	X		X		X	X				X
SWBS 600 Outfitting and Furnishings	X	X		X		X	X				X
SWBS 700 Armament	X	X		X	X	X	X				X
SWBS 800 Integration/ Engineering	X	X			X						
SWBS 900 Ship Assembly & Support Se	X	X		X							
MCC 291 Contract Escalation	X	X	X								
MCC 300 Change Orders		X									
MCC 400 GFM Electronics		X									
MCC 900 GFM Ordnance/ Air		X									
MCC 500 GFM HM&E		X									
MCC 521 GFM Propulsion		X									
MCC 800 Other Support		X									

MCC = Major Category Code
SWBS = Ship Work Breakdown Structure

It is recommended that future ship cost research studies focus on areas such as ship industrial base, ship modularization, composite decks, smaller ships, and developing cost estimating methodologies and cost risk and uncertainty factors at lower WBS levels.

3: HISTORICAL COST RESEARCH - OPERATING AND SUPPORT COSTS

The second set of studies in this literature review pertains to cost research dominated by 18 out of 47 sources whose focuses are Operating and Support (O&S) cost estimating methods, data sets, and case studies. These studies include:

1. "Navy's Visibility and Management of Operating and Support Costs (VAMOSC)"
2. VAMOSC VIEWS Tool
3. Operating and Support Cost Analysis Model (OSCAM)
4. "Manpower Cost Estimating Tool for Enhanced Online Reporting (METEOR)"
5. "Analysis of the Impact of OPTEMPO on Navy O&S Cost"
6. "Ship Scheduled Overhaul Costs Over Time"
7. "Operating and Support Costs, Over Time"
8. "How age affects O&S costs differently across platforms"

Additional secondary studies for O&S are in Appendix C.

Operating and Support (O&S) costs account for the majority of a ship or submarine's total life-cycle ownership cost. Early design decisions have a large impact on O&S cost. Several data sources/tools have become very valuable in helping cost analysts develop O&S cost estimates for informed decisions.

VAMOSC is a key component for data in support of O&S analyses and estimates and has many years of operating support cost and non-cost data for multiple ship classes. These analyses and studies provide greater understanding of all direct and indirect costs that are required to support a system for life of the program. Additionally, the Navy now has more data related to Service Life Extension Programs (SLEPs) for extending the life of a system.

3.1 "NAVY'S VISIBILITY AND MANAGEMENT OF OPERATING AND SUPPORT COSTS (VAMOSC)", "VAMOSC VIEWS TOOLS", AND "OPERATING AND SUPPORT COST ANALYSIS MODEL (OSCAM)", NCCA

The VAMOSC database is the Navy's authoritative O&S data source and is maintained by the NCCA. VAMOSC organizes O&S costs, OPTEMPO data, and technical data from many different data sources. VAMOSC provides the direct O&S costs of weapon systems, some

linked indirect costs (e.g., ship depot overhead), and related non-cost information such as flying hour metrics, steaming hours, age of aircraft, et cetera. The VAMOSC Military Personnel databases contain personnel costs and attribute data. VAMOSC has recently added databases covering Navy Department civilian personnel and Navy facilities physical characteristics and operating costs.

VAMOSC allows for easy access via Web/on-line queries in an Excel downloadable environment. The website address is: https://www.vamosc.navy.mil. The Naval VAMOSC databases are available to US government personnel and contractors directly supporting a government sponsored effort. Frequent users have direct access to the databases and retrieve data themselves. Those who have a one-time or infrequent requirement can request data directly from the VAMOSC program office.

VAMOSC has its own Cost Element Structure (CES) and can be mapped to the 2014 OSD CAPE CES for O&S costs. The VAMOSC CES includes:

- Military Personnel
- Civilian Personnel
- O-Level Consumption
- O&I Maintenance
- Depot Maintenance
- Fuel
- Training
- Infrastructure
- Modernization
- Miscellaneous

VAMOSC Views is a tool that provides direct VAMOSC data access by the development of standard visual displays or "Views" and organize/present data at a Ship Class or Aircraft Type/ Model/ Series (T/M/S) level.

OSCAM is a joint program between the US and UK aimed at developing O&S phase cost models for Ships, Shipboard Systems, and aircraft. It captures the interdependencies among the

various O&S cost elements and cost drivers/ inputs. A System Dynamics method is used for modeling key interdependencies such as operating profile, manning, maintenance, fuel, ordnances, support services, modernization, supplies, training, and engineering/technical services. OSCAM can discretely model depot maintenance periods and account for ship aging.

OSCAM uses VAMOSC based historical cost and non-cost data. The OSCAM model can provide detailed analysis for major cost elements, perform sensitivity and uncertainty analysis, and has the ability to compare multiple model runs and automated tracking of data sources.

There are two suites in OSCAM: (1) Ship Suite – comprised of a Ship model and Ship System model. The OSCAM program released Ship v (8.2) in Jan 2010 and Air v (4.0) in Dec 2012. Access to these tools requires attending a 3-day training course which occurs several times per year. For training and information dates, visit the website, www.oscamnavy.com.

3.1.1 DESCRIPTION OF DATASET

Depending on the specific commodity type and system, VAMOSC databases contain over 30 years of data presented by fiscal year in alternative hierarchical cost element structures. The current content of the VAMOSC databases is summarized below:

- 1700+ U.S. Navy Ships and Submarines — FY1984 – Present
- Military Sealift Command Ships — FY1993 – Present
- 92 Shipboard Systems — FY1993 – Present
- 207 Aircraft Type/Model/Series (T/M/S) — FY1986 – Present
- 1000s of aircraft subsystems — FY1996 – Present
- 32 air and surface-launched missiles and torpedoes — FY1990 – Present
- 472 USMC Ground Combat Systems — FY1995 – Present
- Military Personnel (Navy & USMC active duty & reserve) — FY2002 – Present
- Civilian Personnel (Navy & USMC) — FY2004 – Present
- Navy facilities physical characteristics & operating costs — FY2006 – Present

The above data is allocated to the various datasets (or universes) in VAMOSC described in the following table.

Universe	Description
ATMSR (86-96)	This universe contains both cost and non-cost data for entire fleets of Naval aircraft by year.
ATMSR (97-Present)	This universe contains both cost and non-cost data for entire fleets of Naval aircraft by year.
Civilian Personnel	This universe contains both cost and non-cost data for Navy and Marine Corps civilian personnel by year
Depot Availability	This universe contains lower-level cost and non-cost data for active and NRF ships in CNO Scheduled Availabilities (FY93-present)
Detailed Ships	This universe contains lower-level cost and non-cost data for active and NRF ships: ordnance; intermediate maintenance; public and private shipyards; ship repair facility; and modernization. (FY91-present)
Infrastructure	This universe contains fiscal year data on NAVFAC's Real Property Inventory and CNIC's Certified Obligations issues to maintain existing and build new Navy facilities
Military Personnel Annual	This universe contains both cost and non-cost data for Navy and Marine Corps military personnel by year
Military Personnel Monthly	This universe contains both cost and non-cost data for Navy and Marine Corps military personnel by month
Military Sealift Command	This universe contains individual ship data for MSC ships (FY93-present)
NAMSR	This universe contains detailed maintenance data for aircraft and engines by Work Unit Code (WUC)
NAMSR Plus	This universe contains detailed maintenance and parts data for aircraft and engines by Work Unit Code, Organization and other detailed fields
Shipboard Systems	This universe contains data for selected shipboard systems (FY93-present)
Ships	This universe contains individual ship data for Active and NRF ships (FY84-present)
USMC Ground Equipment	This universe contains both cost and non-cost data for depot maintenance, maintenance parts, supplies & labor (at the organizational and intermediate levels), and ammunition costs and costs per round for USMC ground systems by year
WSR	This universe contains cost and non-cost elements for Weapons

Depending on the cost element, data for a particular commodity is available not only at the system level, but also at the subsystem and component levels. The cost data include expenditures or obligations collected annually from over 130 different sources.

VAMOSC databases have a total of 44 ship non-cost elements that can help cost analyst understand the systems. These elements include:

- Number of ships
- Percent of in-service in FY by ship
- Manning
- OPTEMPO hours
- Fuel consumption
- Maintenance hours

In addition, the VAMOSC corporate documents folder includes a data file with demobilization and disposal costs for ships.

The OSCAM model inputs are based on VAMOSC, user defined inputs, and throughput cost facilities data. The VAMOSC CES output is mapped to the OSD 2014 CAPE CES. Each year the VAMOSC cost and non-cost data sets within OSCAM are updated.

3.1.2 DESCRIPTION OF CERS

VAMOSC is a relational database, and therefore does not contain any CERs.
OSD CAPE now publishes on its Cost Analysis Data Enterprise (CADE) an Operating and Support Cost Visual Analysis Tool (OSVAT), formerly known as the VAMOSC VIEWS Tool, uses data from the three service VAMOSC systems to provide summaries of costs. The graph below provides an example of surface combatants. The CAPE has not updated the tool since it has been transferred to their responsibility. OSVAT is a dynamic excel-based data visualization tool vice a simple PowerPoint file of various graphs. OSVAT Cost Categories include Totals, Personnel, OPTEMPO, Fuel, Supplies and Expendables, and Maintenance & Modernization. This visual analysis allows users to assess historical O&S cost trends against many different operational and technical data, as well as to compare historical data/trends. OSVAT enables analysis for quick rough-order-of-magnitude (ROM) estimating, methodology development, and performing cost assessments.

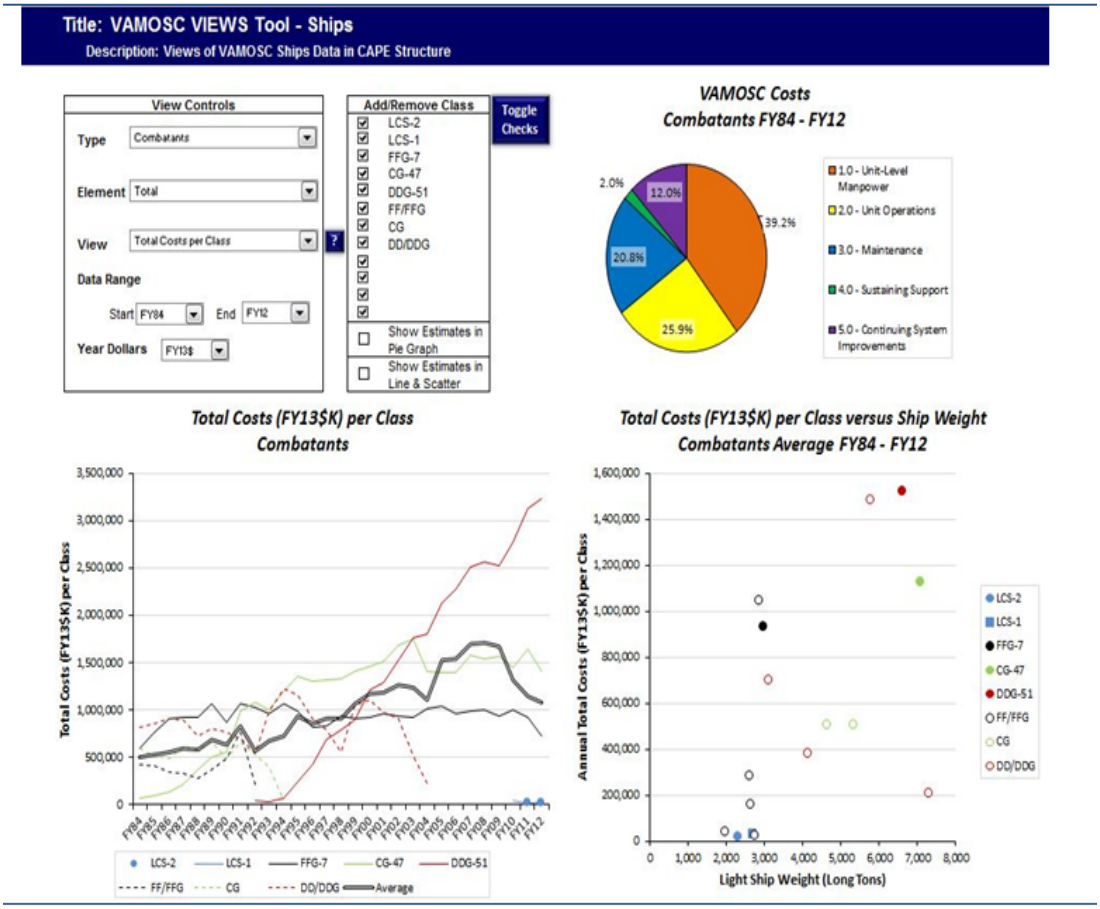

OSCAM model assembles sustainment life cycle cost estimating methodologies within a systems dynamic model. The OSCAM ship model estimates the following cost elements within its sectors:

- **Program Profile Sector**: Each ship in the class is represented explicitly and introduced at specified times. Also, ship service life expectancy and Light Ship disposal weight (long tons) are used as input. Ship age is an important factor which effects fuel consumption, maintenance, and spare parts which are calculated based on ship availability and life expectancy. Disposal cost is based on a per unit basis and accounts for revenue from scrap cost.
- **Personnel Sector**: Crew size and number of crew can be extracted from the Manning Estimate Report (MER) or the Ship Manning Document (SMD) and both are in the VAMOSC database. The user can specify number of crews and Temporary Additional Duty (TAD). The composition of crew by officers, warrant officers, enlisted, civilian

class 1 or 2, and other needs to be quantified and a cost rate for each category is broken down by pay grade and indirect cost.

- **Training Sector**: Training to enable crew to perform assigned maintenance and operational tasks are broken down by classification and by military or civilian pay scale. There is a fixed training cost applied to the platform as a recurring annual cost and is independent of the number of ships and personnel. This cost is only accrued if there is an active ship in the class inventory.
- **Operations Sector:** Ships In-Fleet Time (IFT) will consume fuel. The consumption rate is dependent on whether the ship is steaming underway or in deployment mode. Fuel cost includes direct and indirect costs and varies by age of the ship. Petroleum, oil, and lubricants costs are determined on a cost per ship basis.
- **Supplies and Publications Sector**: This includes non-maintenance supplies and equipage used by the platform and its crew. This is incurred annual per crew person. The publication cost includes forms; directives ordered by platform and are calculated annually by ship.
- **Purchased Services Sector**: This includes printing and copying, ADP rental and contracts, rent, utilities, and postal and telephone services. These are calculated annually per person and depend on ship underway and availability.
- **Ordnance Sector:** This only includes munitions used for training/ exercises and not the cost of wartime munitions.

The VAMOSC and OSCAM program publishes historical ship cost data and CERs that can be plugged into the OSCAM model. The data sets and CERs are downloadable from the OSCAM web site.

3.1.3 STRENGTHS AND WEAKNESSES

The major strength of the VAMOSC database is the depth of available actual cost and technical data with annual updates. Also, the various tools available enhance the capability for developing O&S cost estimates.

The main weakness is that database does not include all shipboard systems. Also, these older studies provide a good history of analysis, but over time, VAMOSC has evolved making these studies irrelevant or outdated.

The key strength of the OSCAM model is the capability for quick turnaround drills, and it is user friendly and easy to document for reconciliation. Also, influence diagrams are very helpful in developing O&S methodology. A weakness is that the latest versions of OSCAM are not NMCI approved.

3.2 "MANPOWER COST ESTIMATING TOOL FOR ENHANCED ONLINE REPORTING (METEOR)", NCCA

Manpower cost Estimating Tool for Enhanced Online Reporting (METEOR) is a manpower cost estimating web-based model. There are five separate models within METEOR, with the Navy Ships model being the most applicable to this literature review, which represents a tool that was created to provide cost estimators with the ability to model the direct and variable indirect manpower costs associated with Navy Ships. Cost baselines are created using a five-year rolling average of execution data at the hull or ship class level, and can be manipulated by choosing to include or exclude cost elements. The model allows use of existing VAMOSC data to model a ship class by pay grade, designator or present rate abbreviation. Direct costs are defined as costs paid directly to a service member plus FICA, MERHC, and Retirement Accrual Pay. The output of the model is the Life-Cycle Costs (LCC) for direct and indirect personnel costs associated with a ship platform.

A VAMOSC user account is required to gain access to METEOR.

3.2.1 DESCRIPTION OF DATASEST

METEOR leverages historic cost and manpower data from the VAMOSC databases and indirect costs from DoD instructions as well as Program Budget Information System (PBIS) to calculate life-cycle costs. Life-cycle costs not only include the direct costs of sustaining an organization, but also the indirect costs that would be logically attributed to the personnel within that organization such as child development support, base support, etcetera. The indirect factors in

METEOR are derived from OSDINST 7041.04 dated 3 Jul 2013. METEOR models are updated approximately every other year.

3.2.2 DESCRIPTION OF CERS

METEOR can calculate LCCs in then-year dollars (TY$) or Constant Year dollars (CY$) with or without the application of a discount rate.

- **The METEOR Squadron Model** provides a life-cycle cost analysis of active duty and reserve personnel assigned to regular and reserve activity aircraft squadrons owned by the Navy and USMC components. These costs include not only the direct costs of personnel attached to a squadron, but also include indirect costs that would be logically attributed to the personnel assigned to the squadron.
- **The METEOR USMC Personnel Model** provides a life-cycle cost analysis of active duty Marine Corps personnel assigned to Marine Corps activities as identified by a Reporting Unit Code/Monitored Command Code (RUC/MCC). This model complements the METEOR Ships model, by allowing an analyst to model costs of any RUC/MCC based organization or activity to include Marine Forces Reserve, HQMC offices and more.
- **The METEOR Navy Personnel Model** provides a life-cycle cost analysis of active duty Navy personnel assigned to Navy and Marine Corps activities as identified by a unit identification code. This model complements the METEOR Ships model, by enabling the modelling of costs of any UIC based activity to include riverine squadrons, specific naval organizations and more.
- **The METEOR Civilian Model** provides life-cycle cost estimates of civilian manpower costs attached to a particular activity as identified by a unit identification code (UIC). The model allows the modeling of civilian manpower costs by location, skill set, pay plan and grade.
- **The METEOR Ships Model** is a tool for life-cycle cost analysis of active duty personnel assigned to Navy ships. These costs include not only the direct costs of active duty personnel attached to a platform, but also include indirect costs that would be logically attributed to the program. The model was created to provide cost estimators with a tool that uses a combination of execution and budget data to model the direct and variable

indirect costs tied to active duty personnel. It allows a cost analyst to estimate the personnel component of life-cycle costs as well the capability to assess the economic impact of the life-cycle cost of manpower-hardware trade-off alternatives.

3.3 "ANALYSIS OF THE IMPACT OF OPTEMPO ON NAVY O&S COST", Technomics, 2004

The focus of this study is on developing an approach to estimate the costs associated with overseas Naval carrier battle group deployments of varying complexity using VAMOSC data. The key areas to be addressed are: 1) the cost to deploy a carrier air wing, 2) the cost to deploy a carrier battle group, and 3) relating deployment cost to operation type and location. Addressing these areas will help provide a better understanding of the effects of OPTEMPO on the cost of operations. The Carrier battle groups consist of Aircraft Carrier (Carrier Air Wing (CVW)), Supply Ships (helicopter support squadron), and Escort ships (helicopter anti-submarine squadrons).

3.3.1 DESCRIPTION OF DATASET

Approximately 70 battle groups spanning 18 separate carriers have been deployed overseas since the start of FY90. Battle groups are typically engaged in more than one operation during a deployment period and vary in their composition of ships and aircraft by numbers and type.

Deployment data was assembled from a variety of sources, including Naval Historical Center for Commander Carrier Group Reports which identifies dates, durations, and locations of deployments and operational engagements, carrier air wing squadrons deployed. Deployments included Western Pacific and the Mediterranean and battlegroups included PACFLT and LANTFLT. Also reviewed were Naval Aviation News Articles from Naval Air Systems Command and Aircraft Inventory and Readiness Reporting System (AIRRS) which identifies tail numbers of aircraft by squadron and date, Equipment Condition Analysis (ECA) for flight hours and sorties by tail number and date.

The Naval Operations used in the study are: 1) deployment in Iraq (1990-2003), 2) deployment in Afghanistan (1998-2002) and 3) deployment in Bosnia (1992-1999). The resulting database

consists of 35 deployments between 1990 and 2002 and includes a mix of Mediterranean and Western Pacific deployments.

Cost data was extracted from VAMOSC direct operations cost data by Type-Model-Series (TMS) for carrier based aircraft by year; Direct Operations Data, regular Aircraft Organizational and Intermediate Costs, regular aircraft count and flight hours by TMS by year, sorties by TMS by year, and sortie data accumulated using the Equipment Condition Analysis (ECA) system. The resulting database consisted of 187 cost data points.

For the carrier battle group analysis, 12 of the 70 deployments were randomly selected and focused on FY95 and later CVN-68 class carriers. Cost data was extracted from VAMOSC and programmatic and technical data was gathered from several sources including Naval Vessel Register and US Navy Chief of Information (CHINFO).

3.3.2 DESCRIPTION OF CERS

The cost of CVW operations is dependent on the OPTEMPO of the CVW. OPTEMPO can be measured in terms of the number of flight hours and sorties flown on a deployment. Flight hours and sorties are dependent on the type of operation engaged and the geographical location of the operation. It was hypothesized in the study that geographical location of the operation has a strong influence on flight hours per sortie and operation type has a strong influence on the total number of air wing sorties flown. The resulting CER for CVW Direct Operations is as follows:

$$\mathrm{CVW_{DO}}\,\$ = f(\mathrm{AC}, \mathrm{HPS}, \mathrm{SPA})$$

where,

AC = Aircraft Count

HPS = Hours per Sortie

SPA = Sorties per Aircraft

The Flight Hours per Sortie

$$\mathrm{HPS} = f(\mathrm{HPS}, \mathrm{FR}, \mathrm{PW}, \mathrm{RW}, \mathrm{IOTA}, \mathrm{AW}, \mathrm{BOTM}, \mathrm{SOM})$$

where,

HPS = Hours per Sortie

FR = Ratio of Fighter attack aircraft count to support aircraft count

Primary Operation Location/Type Variables (Value=1 if the condition applies)

PW = War with Iraq based on Persian Gulf

RW = War with Iraq based in the Red Sea

IOTW = Iraq Operations other than war

AW = War with Afghanistan

BOTW = Bosnia Operations other than war

SOM = Somalia Operations

Note: The status quo (i.e., all location/type variables=0) corresponds to war with Bosnia

The CER for Total CVW deployed Sorties is as follows:

CVW_{DS} \$ = f(TDS, DD, AC, FR, MC)

where,

TDS = Total Deployed Sorties

DD = Number of days deployed

AC = Number of aircraft deployed

FR = Ratio of Fighter attack Aircraft Count to Support Aircraft Count

MC = Major combat

The fiscal year cost of Battle Group Operations (less depot and modernization) during which a 6 month deployment occurs is as follows:

BGO \$ = f(n, CPS, SHU/Ship, BBLs/SHU)

where,

n = Total number of ships in the battle group

CPS = Average crew per ship for ships in the battle group

SHU/Ship = Average steaming hours underway per ship (non-nuclear)

BBLs/SHU = Average barrels of fuel per steaming hour underway (non-nuclear)

The cost for Steaming Hours Underway (SHU) (non-nuclear ship only) is as follows:

SHU \$ = f(PV, OPS, Theatre)

where,

PV = Number of port visit

OPS = Number of operations engaged

Theatre = Adriatic Sea, Persian Gulf, Afghanistan, Persian Gulf, or Operation Southern Watch

The quantity of Barrels per Steaming Hours Underway (BBLs/SHU) is as follows:

BBLs/SHU = f(LSD, Operation Type)

where,

LSD = Average Light Ship Displacement across all battle group ships

Operation Type = No Fly Zone, Peace Accords, Humanitarian, or War or Strike Missions

3.3.3 STRENGTHS AND WEAKNESSES

The key strength is that cost drivers for aircraft carrier battle groups are included in analysis. The key weakness is that the data and the CERs are derived from specific deployments and battle operations. Applying these CERs to other theatres may not be applicable as complexity of the battleground and war, enemy strength and weakness varies. This variation may have a large influence on the direct cost of the aircraft battle group.

3.4 "SHIP SCHEDULED OVERHAUL COSTS OVER TIME", TASC, 2003; "OPERATING AND SUPPORT COST OVER TIME", TASC, 2004; AND "HOW AGE AFFECTS OPERATIONS AND SUPPORT (O&S) COSTS DIFFERENTLY ACROSS PLATFORMS", TASC, 2006

The effect of age on O&S costs was studied in this series of reports from TASC (Northrop Grumman IT). The original 2003 study presented an analysis of 13 years of scheduled overhaul costs over the typical life span of a ship from the Navy's Visibility and Management of Operating and Support Costs (VAMOSC) database, with a focus on the significant increase in cost as a ship ages. The 2004 study added additional years of VAMOSC data as well as added two steam propelled ship classes. In the 2006 paper, the research was further refined to show that the O&S cost for a ship increases over time and then, because the number of overhauls and repairs decrease at the end of a ship's life, the cost decreases in the last few years of a ship's life.

The discussion in the 2006 paper also describes the more recent research that demonstrates there is also an age effect in aircraft. Also, age affects different cost elements in each platform. This is crucial knowledge when it comes to estimating O&S costs because it shows that each platform needs to be researched for age effects independently of other platforms.

Age effects on total O&S costs were analyzed, as well as lower-level cost elements including scheduled overhaul, repair parts, Other POL, Centrally Provided Material, weight, and propulsion type.

Additionally, the study expands upon this effort to analyze the age effect on Consumables, Aviation Depot Level Repairables (ADLRs), and total O&S costs for both fixed and rotary wing aircraft.

3.4.1 DESCRIPTION OF DATASET

VAMOSC data was used for both the initial and follow-on studies. For the ships research, Cruiser (CG-16CL, CG-26CL, CG-47CL), Destroyer (DD-963CL, DDG-51CL, DDG-993CL), Frigate (FFG-7CL) data was used. The extension of the study was to explore the age effect on aircraft such as Strike Fighter (F/A-18B-E; AV-8B) and Other (E-2C, E-6A) for fixed wing data and MH-60H, MH-60S, SH-60B, SH-60F for rotary wing data.

3.4.2 DESCRIPTION OF CERS

This study does not contain any CERs. However, graphs of the plotted data including trendlines, and some regression outputs for total O&S, repair parts, other POL, and centrally provided material are provided.

A summary of the age effect on ships is provided and identifies impacts to the following O&S cost elements: Scheduled Overhaul (first order), Repair Parts (first order), Centrally Provided Material (second order), Equipment Rework (second order), Naval Aviation Depot Maintenance, which includes the cost of depot maintenance for surface combatants – primarily the rework of the gas turbine engines, (second order), Fleet Modernization (third order), Other Depot Maintenance (third order).

The research shows that the age of an aircraft affects its O&S cost for both fixed wing and rotary wing aircraft. Unlike ships, it is reasonable to assume that the relationship between O&S cost and age is linear. Ships contain a lot of parts, but not all of them are critical and contribute to sea worthiness. Maintaining an aircraft's flight worthiness requires a higher-level of caution thus any part issues must be immediately resolved and repaired to meet stringent safety requirements. Visual analysis of the data shows only qualitative age effects on a variety of O&S costs normalized by flight hour. Age impacts should be a consideration in developing an O&S cost estimate.

3.4.3 STRENGTHS AND WEAKNESSES

These studies provide evidence of age's effect on a variety of O&S cost elements for both ships and aircraft. While the impact was present in the datasets used, the datasets were somewhat limited. The rotary wing data only contained the H-60 type/model and should be expanded to confirm that the effect exists for other rotary wing type/models. In addition, there were only two cost elements studied for aircraft. It is also unclear how the age of a ship or aircraft was determined. The age of a ship class or type / model should be determined at the hull level and rolled up to generate an average age. This approach should be used for generating any quantifiable impacts of the relationships demonstrated in this study.

The key strength of this study is the relationship of age on the overall O&S cost estimate and that it is very helpful for developing annual budgets.

The weaknesses include the lack of data being provided in the study as well as all of the descriptive statistics. Relationships are provided but the strength of those relationships is generally not provided. Also, the consideration of differences in type of ships and construction in relationship to time is not considered. Modern manufacturing and design changes will affect the O&S cost and is recommend to be included as part of future studies.

OPERATING & SUPPORT CONCLUSION

The strength of the historical research papers is in identifying credible data sets and tools for O&S life-cycle phases and methodology development based upon the available data from

VAMOSC. Today, VAMOSC and its primary/related tools (VAMOSC Views, OSCAM, and METEOR) provide a tremendous amount of data, knowledge, and estimating resources for the cost community.

The following table summarizes the elements addressed in the studies reviewed. Areas marked with an "X" indicate information exists. With the Navy's VAMOSC (and dependent VAMOSC Views and OSCAM tools), as well as METEOR, the Navy is well situated to address O&S cost estimates and analysis issues.

WBS Element / Study	NAVY'S VISIBILITY AND MANAGEMENT OF OPERATING AND SUPPORT COSTS (VAMOSC)	VAMOSC VIEWS TOOLS	OPERATING AND SUPPORT COST ANALYSIS MODEL (OSCAM)	MANPOWER COST ESTIMATING TOOL FOR ENHANCED ONLINE REPORTING (METEOR)	ANALYSIS OF THE IMPACT OF OPTEMPO ON NAVY O&S COST	SHIP SCHEDULED OVERHAUL COSTS OVER TIME	OPERATING AND SUPPORT COST OVER TIME	HOW AGE AFFECTS OPERATIONS AND SUPPORT COSTS DIFFERENTLY ACROSS PLATFORMS
Total O&S					X			
1.0 Unit-Level Manpower	X	X	X	X		X	X	X
1.1 Operations	X	X	X	X		X	X	X
1.2 Unit-Level Maintenance	X	X	X	X		X	X	X
1.3 Other Unit-Level	X	X	X	X		X	X	X
2.0 Unit Operations	X	X	X			X	X	X
2.1 Operating Material	X	X	X			X	X	X
2.2 Support Service	X	X	X			X	X	X
2.3 Temporary Duty	X	X	X			X	X	X
3.0 Maintenance	X	X	X			X	X	X
3.1 Organizational Maintenance	X	X	X			X	X	X
3.2 Intermediate Maintenance	X	X	X			X	X	X
3.3 Depot Maintenance	X	X	X			X	X	X
4.0 Sustaining Support	X	X	X			X	X	X
4.1 System Specific Training	X	X	X			X	X	X
4.2 Support Equipment Replacement	X	X	X			X	X	X
4.3 Sustaining Engineering and Program Mgmt	X	X	X			X	X	X
4.4 Other Sustaining Support	X	X	X			X	X	X
5.0 Continuing System Improvements	X	X	X			X	X	X
5.1 HW Modifications/ Modernization	X	X	X			X	X	X
5.2 SW Modifications/ Modernization	X	X	X			X	X	X
6.0 Indirect Support	X	X	X			X	X	X
6.1 Installation Support				X				
6.2 Personnel Support				X				
6.3 General Training and Education	X	X	X			X	X	X

4: OVERALL CONCLUSION

There are 47 research papers discussed in this report. The detail summary of research papers includes data sets, estimating methods, and case studies. The following tables portray the studies into various views in order to better determine the areas where cost research exists.

DoD Phase	Dataset	Estimating Method	Case Study	Total
Research & Development				
Materiel Solution Analysis				
Technology Maturation & Risk Reduction			2	2
Engineering & Manufacturing Development	1		1	2
Production & Deployment	3	4	18	25
Operations & Support	10	8		18
All Phases				
Total	14	12	21	47

Ship Type	Dataset	Estimating Method	Case Study	Total
Aircraft Carrier			2	2
Amphibious Warfare			2	2
Amphibious Warfare Craft				
Auxiliary-Mobile Logistics				
Auxiliary-Support				
Combat Logistics				
Littoral				
Mine Warfare				
Submarine		1	3	4
Surface Combatant		3	1	4
Unmanned Maritime System				
All Surface				
All Types	14	6	11	31

In summary, there are number of ship cost research papers but most of the focus is on production and operating & support cost. There are few studies for development cost estimates. In addition, there is a lapse in detail of cost estimating relationships based on performance and capability. Also, there is an apparent lack of cost risk and uncertainty focus in the research papers reviewed. Even though there were no cost research studies found that cover the DoD Materiel Solution phase due to historical ship Analyses of Alternatives (AoA's) being uncommon, they are still considered to be crucially important in shaping the future navy ship fleet.

In addition, several ship classes do not have studies and analysis specific to their ship class. However, there are several studies that are applicable to all types of ships. The analyst retains

the responsibility of reviewing individual studies to determine their applicability to their situation.

5: FURTHER READING, AND FUTURE RESEARCH

Appendix D contains a listing of overarching references that contribute to ship cost estimating. These references compose the authoritative documentation for cost estimating associated with acquisition of DoD and DON programs. This reference list should be a starting point for any cost analyst.

The focus of this literature review was the compilation and evaluation of ship and submarine cost estimating studies that were readily available. Studies that were collected, but are not assessed in this phase of the documentation are related to R&D, EVM, and Industrial Base Analyses. More information related to these studies is provided below:

Research and Development

The identified R&D studies are:

1. "Planning for the Introduction of New Technologies on Ship Systems- A System Dynamics Cost Analysis Approach," K. Triantis, DoDCAS 2003
2. "Assessing Aegis Program Transition to an Open-Architecture Model", RAND, 2013
3. "Domain-Driven Software Cost Estimation: Space, Air, Ship, and Ground Systems," Dr. Wilson Rosa, SCEA / ISPA 2012.
4. "Capability Based Cost Data Collection and Analysis", Technomics, 2012

The first paper addresses academic research conducted by Konstantinos Triantis, a professor in the Industrial and Systems Engineering department at Virginia Tech. The second study is specific to the Aegis Combat System and is more appropriately addressed in a Shipboard Electronics Literature Study. The third study is specific to software cost estimation and can be applied to various domains. The final piece of research is a data collection and analysis effort that is broad-based, collecting cost, schedule, and capability data on all ACAT I programs since 1969. The research was sponsored by the Office of the Deputy Assistant Secretary of the Army for Cost and Economics (ODASA-CE).

Production

Some of the references cited in the Production Studies section are authoritative sources, such as the NAVSEA Cost Estimating Handbook, SECNAVINST 5000.2, and DoD Instruction 5000.02. These provide the different aspects of cost estimating and are helpful for cost analysts. References on US Navy shipyards' workload, workforce management practices, and sustaining submarine design, such as "The U.S. Aircraft Carrier Industrial Base: Force Structure, Cost, Schedule, and Technology Issues for CVN-77"and "U.S. Navy Shipyards: An Evaluation of Workload and Workforce Management Practices", are also noteworthy since they provide important insight into today's shipbuilding design and construction practices.

O&S

References cited in the O&S Studies section contain recognized data sources and tools, such as: VAMOSC, OSCAM, METEOR, and VAMOSC VIEWS Tool. Since VAMOSC contains a rich and robust O&S dataset, there are several studies based solely on the VAMOSC data. These studies further explore trends in O&S data and attempt to isolate and better understand the impact that cost drivers have on O&S costs. Although VAMOSC, OSCAM, METEOR, and VAMOSC VIEWS Tool are extremely useful resources to the cost analyst today, they are currently undergoing enhancements and updates to provide even more utility and functionality to the cost community. It is for this reason that the costs analyst should consider the descriptions listed in Appendix F to be a starting point and should always reference the respective websites and user guides for the most up-to-date information.

Industrial Base Analysis

Regarding Industrial Base Analyses, the following study is indicative of the analysis that takes place.

1. "Recapitalizing Shipbuilding: Factors Influencing the Shipbuilding Industrial Base," Chris Deegan, DoDCAS 2007

This study addresses the industrial base and the factors that may affect the dynamic environment for shipbuilding. It was executed in 2007 and certainly may be an area that is ripe for research and update, given the current fiscal environment, and changes to the shipbuilding industrial base since 2007.

Earned Value Management

Earned Value Management and Industrial Base studies certainly impact ship cost analysis and the understanding of the health of a program from a cost perspective, and will be more specifically examined in a second phase of this literature review. The identified Earned Value Management (EVM) and Industrial Base studies in the data set to be incorporated in a revised literature review are:

1. "Ending the EAC Tail Chase," Eric Druker, Dick Coleman, Jeff Jaekle, Elisabeth Boyadjis, SCEA/ISPA 2007
2. "Performing Statistical Analysis on Earned Value Data," Eric Druker, Dan Demangos, Dick Coleman, SCEA/ISPA 2009
3. "A Case Study in EAC Growth: What did we know and when did we know it?" Dick Coleman, SCEA/ISPA 2010
4. "Ship Construction Estimates at Completion: A New Technique Using the Weibull Function," Shawn Rudolph, SCEA/ISPA 2010
5. "Implementing Cost and Software Data Reporting (CSDR) Requirements on an ACAT I Shipbuilding Program," Mark Andersen, Richard Hoffacker, SCEA 2006
6. "An Innovative Approach to Executing an Integrated Baseline Review (IBR) on an ACAT I Shipbuilding Program," Mark Andersen, Richard Hoffacker, SCEA 2006

Contract reporting via the Defense Automated Cost Information Management System (DACIMS) is critical to data collection and evaluation in support of EVM and Industrial base studies. The sixth study examines the Integrated Baseline Review (IBR) process. The IBR process helps engage~~s~~ the government and the contractor to establish a consistent understanding of the expectations regarding implementation of performance plans and management control systems to support EVM requirements for contract reporting. The fifth study similarly addresses the establishment and execution of CSDR data collection requirements. CSDRs may be less helpful to programs in execution because of submission dates, but they provide a wealth of information to support analysis for future programs. The remaining studies with the exception of the seventh study, utilize contractor data to support cost analysis. The second study provides information about statistical analysis for earned value data. The first, third, and fourth studies specifically deal with understanding contributing factors and calculating Estimates at Completion (EAC).

In addition to digging deeper into the R&D, EVM, and Industrial Base studies collected in this phase, a second phase of this project would evaluate the ship and submarine cost estimating community more broadly and identify a more robust set of studies to incorporate. A starting place would be to collect and assess any of the studies cited by the studies that were evaluated for this phase. They are provided in Appendix E and F, which contains the Production and O&S annotated bibliography. (note: Appendix D and F are not listed below)

Overarching Needs and Future Research

There are some overarching themes across all NCCA divisions that merit discussion for further research. Ironically, the same current fiscal environment that makes Cost and Affordability considerations so important has also limited both research funding and the ability to gather and exchange ideas in a forum such as the Department of Defense Cost Analysis Symposium (DoDCAS), deferred and minimized in 2014 and canceled outright in 2013. In spite of these limitations, it is imperative to find a way to consider the cost impact of emerging policies such as Better Buying Power 2.0. As such, all cost initiatives associated with changing policy are ripe for research. Specifically, Will Cost/ Should Cost, and metrics and methods for effective documentation and implementation of cost reduction initiatives, are areas where the ship community could benefit from research. As we look at cost reduction initiatives for Ohio Replacement and other new ship design programs, a thorough and quantifiable approach to evaluating initiatives would be beneficial.

A second area where the ship community could benefit from additional research is the discussion of commonality and modularity as they relate to acquisition. According to the 2014 ASNE Conference, modular ships are the future and our cost models lack data for this design concept. Why would a program desire to integrate modular systems that may have commonality across multiple platforms? Why would the Navy encourage or discourage joint approaches to develop and implement commonality? There are a number of questions regarding the impact of economic quantity orders, and certainly support requirements for commonality, that pose important research questions.

Likewise, with a move toward more open architecture, it would be useful to update our approach to software research to incorporate the idea of building and supporting open architecture software. Refer to the Shipboard System Integration (SSI) Cost Estimating Methodology as an example of a historical study that could benefit from an update related to the concept of open architecture.

The Littoral Combat Ship (LCS) program and many of the Coast Guard's recapitalization ship programs are making use of second-tier yards (i.e., other than the erstwhile big six of Newport News, Electric Boat, Ingalls, Bath Iron Works, NASSCO, and Avondale) and more commercial-like shipbuilding standards when comparable to military standards. Research to quantify the cost impacts of both of these changes for these smaller ships would be beneficial.

Finally, there is an increasing emphasis on consistent, reliable and validated data to support cost estimating. An effective use of research funding may be to validate the cost data collection process to ensure reliability and consistency of reporting in the cited Production and O&S cost databases. For instance, do all VAMOSC data entries follow a consistent and repeatable process? Likewise, do all contractors reporting to DACIMS follow the same consistent approach to data reporting? How might the database sponsors go about inserting more rigors in the data collection and validation process? What is the best manner in which to collect the requisite accompanying technical (e.g., SWBS weights) and programmatic (e.g., ship acquisition and build schedules) data? The just-started Air Force Cost Analysis Agency (AFCAA) Cost Estimating Modeling (CEM) project is tackling these sorts of questions and issues, in the context of the established CSDR and VAMOSC processes and standard CDRL requirements. NCCA might consider taking a similar approach for Ships and Submarines, and other commodities not addressed by the AFCAA effort.

Beyond these overarching themes, research interests for Acquisition and O&S Phases specifically are noted below.

Acquisition

The acquisition tools and data sets mentioned in this report should be continually updated to reflect the most recent historical data and cost estimating guidelines. In addition, breaking down

the SWBS to lower levels of the SWBS by ship class would help in understanding if current data collection and methodologies are sufficient. Also, performing follow-up studies on cost estimating methodologies such as the Shipboard System Integration (SSI) equations would likely provide improved parametric approaches. Other studies that need further review, which might yield additional research ideas, can be found in Appendix B. For example, the Advanced Learning Model (ALM) approach, successfully demonstrated on the DDG 51 and LHD 1 classes, could be extended to other ship classes. Collaboration within the cost community, e.g., joint cost research efforts with NAVSEA 05C, would greatly facilitate the success of these studies. Easy access to the data without compromising its sensitivity could both improve the quality of cost estimates and increase the likelihood of getting pertinent information to decision makers in a timely manner.

O&S

Based upon our studies in this literature review, some identified weaknesses include developing a complete understanding of cost growth impacts because of age, OPTEMPO impacts, and Service Life Extension Programs (SLEPs). For SLEPs, how much investment is enough and for how long? Dedicated cost research in these areas has been minimal over the last ten years, but there is now a much more complete collection of total life-cycle costs captured within the VAMOSC system.

Additionally, many CERs developed in the past have been influenced by the age range of the systems studied. The objective of a cost analyst is to estimate costs over the service life of the ship (30-year annual average, say). Yet analysts tend to not fully understand/address this issue when they develop CERs. A common misstep is to focus on the latest analogy which may be from a fairly new/young ship. Given our improved O&S databases, analysts should attempt to improve the OSCAM CERs and VAMSOC VIEWS displays (to more appropriately assess OPTEMPO and age influences), and conduct specific research in the areas of age, OPTEMPO and SLEP cost impacts. As noted in the cited papers, it is often difficult to untangle age and generation effects. That is, the younger ships are also by necessity newer ships, so are cost differences due to less wear-and-tear or “next-generation” designs, or both?

VAMOSC has just started to collect more detailed software maintenance cost and technical data for ship systems. This effort should also be of key interest for studying and improving our tools. Understanding how much modernization is needed, when a cost analyst should implement modernization, and what purpose modernization serves, whether it is to address obsolescence, improve mission capabilities, et cetera, is another important area to analyze. This activity is often down-played or overlooked when initial estimates are generated. There is now much more data and data behavior available to analyze in this area. VAMOSC has disposal cost in corporate documents.

6: Appendices

APPENDIX A: Definitions

Analysis of Alternatives (AoA) – Broadly examines multiple elements of project or program alternatives including technical risk and maturity, and costs. AoAs are intended to illuminate the risk, uncertainty, and the relative advantages and disadvantages of the alternatives being considered; show the sensitivity of each alternative to possible changes in key assumptions; and aid decision-makers in judging whether or not any of the proposed alternatives offer sufficient operational and/or economic benefit to be worth the cost. (NAVSEA CEH)

Basic Construction Cost - Basic Construction is the main segment of the shipbuilder portion of the ship End Cost. Basic Construction includes all allowable shipbuilder direct labor, indirect labor (overhead), and material costs required to construct the ship, plus an amount for cost of money and profit. (NAVSEA CEH)

Break-Even Analysis - Analysis used to uncover the point when the cumulative value of savings is equal to the cumulative value of investment. (NAVSEA CEH)

Business Case Analysis (BCA) - An economic analysis that documents the review of an entire functional process or sub-process, such as the use of alternative launch vehicles, etcetera. It requires a risk assessment of each alternative solution, requesting a high and low estimate for each cost element and subsequent probability distribution of expected costs. (NAVSEA CEH)

Change Orders – The Navy often makes changes to an in-place shipbuilding contract in order to (a) include state-of-the-art improvements that come about during the lengthy construction periods of a ship, (b) correct deficiencies discovered in contract drawings or Government Furnished Information (GFI), which are the responsibility of the government, (c) correct differences between contract drawings and ship specifications, (d) incorporate safety items that emerge during construction, (e) incorporate improvements that are generated by the operational forces afloat, and approved for implementation, (f) require the shipbuilder to repair or modify GFM, (g) change the contract ship delivery point, the contract date of delivery, or the method of shipment or packing. Typically, Change Orders are budgeted at a level of ten percent (10%) of

the basic construction cost for lead ships and five percent (5%) of the basic construction cost for follow ships. There are two kinds of change orders, both of which are authorized through supplemental agreements to the shipbuilding contract, and the costs are accumulated in the Change Order category:

1. Headquarters Modification Requests (HMRs) - HMRs are initiated by NAVSEA. These change orders are relatively complex involving specification revisions and a rigorous review process which is overseen by the Program Manager.
2. Field Modification Requests (FMRs) - FMRs are initiated by the on-site Navy Supervisor of Shipbuilding Office. These change orders are usually "fact of life" changes, such as correcting defective Government Furnished Equipment (GFE), and require SUPSHIP technical reviews and cost estimates

Contractor Furnished Equipment (CFE) – Equipment furnished by the shipbuilder whose cost is included in Basic Construction Cost. (NAVSEA CEH)

Construction Plans - Nonrecurring costs related to detailed construction plans and other associated engineering tasks for lead ships. Planning yard, lead yard, and follow yard costs for ship classes may also be accounted for in this category or in the Basic Construction category. (NAVSEA CEH)

Continuing System Improvements – Cost of hardware and software modifications to keep the system operating and operationally current. (O&S Cost Estimating Guide)

Cost as an Independent Variable (CAIV) – A class of cost performance trade studies involving a systematic, interdisciplinary examination of the several factors affecting system design that focuses on performance trades for an overall system: system design variables (i.e., weight, bandwidth), key performance parameters, system utility assessments, and various aspects of system cost. Executing a CAIV analysis involves the definition and coordination of these factors into a comprehensive study plan that compares design, performance and cost into some common unit of measurement. (NAVSEA CEH)

Cost Benefit Analysis (CBA) - An analytic technique that compares the costs and benefits of investments, programs, or policy actions in order to determine which alternative or alternatives maximize net profits. Net benefits of an alternative are determined by subtracting the present value of costs from the present value of benefits. CBA is comprised of 8 steps: analysis of the current environment, perform gap analysis, identify alternatives, estimate costs, perform sensitivity analysis, characterize and value benefits, determine net value of each alternative, and perform risk analysis. (NAVSEA CEH)

Cost Driver - Those components of the systems or input variables that will have a significant effect on the final cost. (NAVSEA CEH)

Cost Element Structure (CES) - The framework used to cost a program or project that includes every unit of costs to perform a task or to acquire an item. (NAVSEA CEH)

Cost Estimating Relationship (CER) - A mathematical relationship that defines cost as a function of one or more parameters such as performance, operating characteristics, physical characteristics, et cetera.

Deployment - A term used for the Production and Deployment phase of the defense acquisition process when the product is specifically related to defense unique software intensive programs, i.e., a program that is dominated by the need to develop a complex, usually defense unique, software program that will not be deployed until several software builds have been completed. (DoDI 5000.02)

Design to Cost - A class of cost performance trade studies that demands that cost is considered as a key design parameter during all phases of the acquisition process. DTC goals, in constant dollars, are established early to become part of the design trade-off process that examines other parameters such as schedule, performance, and operational capability. DTC goals can be set in each phase of the acquisition process and tracked until DTC parameters have been met. The DTC goal can be in the form of average unit sail away cost targets. Shipbuilders and GFM

vendors can be provided with DTC contracting incentives to motivate them during the production phase. (NAVSEA CEH)

Discounting - Technique for converting forecasted amounts to economically comparable amounts at a common point or points in time, considering the time value of money. (NAVSEA CEH)

Disposal - Costs associated with demilitarization and disposal of a military system at the end of its useful life. These costs in some cases represent only a small fraction of a system's life-cycle cost and may not always be considered when preparing life-cycle cost estimates. However, it is important to consider demilitarization and disposal early in the life-cycle of a system because these costs can be significant, depending on the characteristics of the system. Costs associated with demilitarization and disposal may include disassembly, materials processing, decontamination, hardware, collection/storage/disposal of hazardous materials and/or waste, safety precautions, and transportation of the system to and from the disposal site. Systems may be given credit in the cost estimate for resource recovery and recycling considerations. (CAIG)

Earned Value Management (EVM) - This is type of project management analysis technique for cost, schedule performance to planned requirements. All work is planned, budgeted, and scheduled in time-phased increments constituting a cost and schedule measurement baseline. (NAVSEA CEH)

End Cost - The summation of the categories reported in the Procurement Budget Exhibit, P-5, including: Construction Plans, Basic Construction, Change Orders, GFM (including Electronics, Propulsion, HM&E), Other Cost, Ordnance, and Escalation.

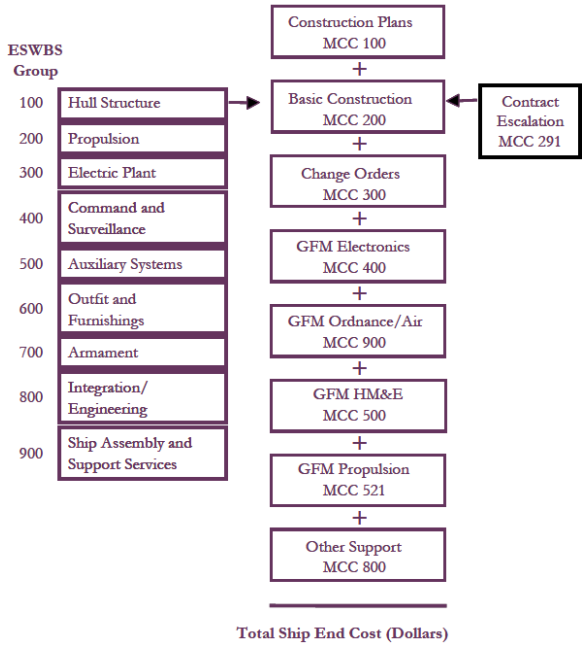

Figure 1: End Cost Breakout (NAVSEA CEH).

Engineering & Manufacturing Development (EMD) - The purpose of the EMD Phase is to develop, build, and test a product to verify that all operational and derived requirements have been met and to support production or deployment decisions. (DoDI 5000.02)

Escalation – See Inflation

Expanded Ship Work Breakdown Structure (ESWBS) - A five-digit functional classification system. For weight reporting purposes, only the first three digits of this system apply. The fourth and fifth single-digit classification levels are used to incorporate the functions that support maintenance and repair needs. Ship structures and machinery are divided into functional groups by the ESWBS as described in Expanded Ship Work Breakdown Structure (ESWBS) for All Ships and Ship/Combat Systems, Volumes 1 and 2 (NAVSEA S9040-AA-IDX-010/SWBS 5D and S9040-AA-IDX-020/SWBS5D). The ESWBS is a comprehensive framework that is used through the ship life-cycle to organize and correlate elements for cost, weight, specifications, system function and effectiveness, design, production, and maintenance studies. Numbering systems for ship's drawings and related documents, general and contract specifications, ship's weight groups, and the NAVSEA Technical Manual (NSTM) are based on the ESWBS. (NAVSEA CEH)

Government Furnished Material (GFM) - Hardware and software provided by the Navy to the shipbuilder. There are four categories of GFM included in an End Cost estimate:

1. Electronics - Includes in this category are electronics production components, training support equipment, test and engineering services, and repair parts associated with installation.
2. Ordnance/Air – Includes fire and missile control systems, search and aircraft control radars, missile launching systems, gun systems, training support equipment, test and integration services and other ordnance equipment, any air-related GFM; e.g., arresting gear engines, landing aids and selected catapult components.
3. Hull, Mechanical, Electrical (HM&E) – Includes equipment, deep submergence systems, small boats, special vehicles, environmental protection equipment, training support equipment, HM&E engineering services, repair parts associated with installation of HM&E equipment, and all medical equipment provided by the Bureau of Medicine and Surgery (BUMED). The HM&E category is the GFM category which most frequently can shift from GFM to CFE or vice versa in shipbuilding contracts.
4. Propulsion – This is a category of HM&E. In most cases, the propulsion components for conventionally powered ships will be shipbuilder-responsible, contractor furnished material (CFM) and the Propulsion category is not used. However, the Propulsion category is always used in the case of nuclear-powered ships, since nuclear reactors and cores always are provided to shipbuilders as GFM. When propulsion GFM is involved, this category can include propulsion items such as nuclear reactors, cores, turbines, gears and other selected propulsion items. (NAVSEA CEH)

Independent Cost Assessment - An outside evaluation of a cost estimate, taking into account both the quality and accuracy of the estimate in question, looking for specific cost and technical issues. Also, a process used to determine whether the current program estimate reflects the program of record. (NAVSEA CEH)

Indirect Support - Cost of support activities that provide general services that cannot be directly attributed to a system. Indirect support is generally provided by centrally managed activities that support a wide range of activities. (O&S Cost Estimating Guide)

Industrial Base (Defense Industrial Base) - The Department of Defense, government, and private sector worldwide industrial complex with capabilities to perform research and development, design, produce, and maintain military weapon systems, subsystems, components, or parts to meet military requirements. (JP 1-02)

Inflation -Inflation measures the change in prices from one period to another, and is usually expressed as a percent. Escalation represents the cost for the time-phased impact of inflation over the ship construction period, and is usually expressed as a dollar value. (NAVSEA CEH)

Investment - Consists of production and deployment costs incurred from the beginning of low-rate initial production through completion of deployment. Typically includes costs associated with producing and deploying the primary hardware; system engineering and program management; peculiar and common support equipment, peculiar training equipment/initial training, technical publications/data, and initial spares and repair parts associated with production assets; interim contractor support that is regarded as part of the system production and is included in the scope of the acquisition program baseline; and military construction and operations and maintenance associated with system site activation. (O&S Cost Estimating Guide)

Life-Cycle Cost (LCC) - The total cost for all phases of a project or system including design, development, production, operations, and disposal. (NAVSEA CEH)

Learning Curve - Learning curves, sometimes referred to as improvement curves or progress functions, are based on the concept that resources required to produce each additional unit decline as the total number of units produced increases. The term learning curve is used when an individual is involved and the terms progress function or an improvement curve is used when all the components of an organization are involved. The learning curve concept is used primarily for uninterrupted manufacturing and assembly tasks, which are highly repetitive and labor intensive. (NAVSEA CEH)

Maintenance - Cost of all maintenance other than maintenance manpower assigned to operating Units; may include contractor maintenance. (O&S Cost Estimating Guide)

Materiel Solution Analysis - The purpose of this phase is to conduct the analysis and other activities needed to choose the concept for the product that will be acquired, to begin translating validated capability gaps into system-specific requirements including the Key Performance Parameters (KPPs) and Key System Attributes (KSAs), and to conduct planning to support a decision on the acquisition strategy for the product. AoA solutions, key trades between cost and performance, affordability analysis, risk analysis, and planning for risk mitigation are key activities in this phase. (DoDI 5000.02)

Net Present Value (NPV) - A project's net contribution to wealth = Present Value minus Initial Investment. (NAVSEA CEH)

Non-Recurring - A one-time cost that will occur on a periodic basis for the same organization. Non-recurring costs include preliminary design effort, design engineering, and all partially completed reporting elements manufactured for tests. Non-recurring costs also include training of Service instructor personnel. (NAVSEA CEH) Those costs which are generally incurred on a one-time basis and include such costs as plant or equipment relocation, plant rearrangement, special tooling and special test equipment, preproduction engineering, initial spoilage and rework, and specialized work force training. (Federal Acquisition Regulations System)

O&S - Consists of sustainment costs incurred from the initial system deployment through the end of system operations. It includes all costs of operating, maintaining, and supporting a fielded system. Specifically, this consists of the costs (organic and contractor) of personnel, equipment, supplies, software, and services associated with operating, modifying, maintaining, supplying, training, and supporting a system in the DoD inventory. It may include interim contractor support when it is outside the scope of the production program and the acquisition program baseline1. O&S costs include costs directly and indirectly attributable to the system (i.e., costs that would not occur if the system did not exist), regardless of funding source or management control. Direct costs refer to the resources immediately associated with the system or its operating unit. Indirect costs refer to the resources that provide indirect support to the system's manpower or facilities. For example, the pay and allowances (reflected in composite standard

rates) for a unit-level maintenance technician would be treated as a direct cost, but the (possibly allocated) cost of medical support for the same technician would be an indirect cost. (CAIG)

Other Cost – A category of End Cost that includes costs for Test and Instrumentation, Stock Shore–Based Spares, and Other Support which can include the costs of Planned Maintenance Subsystems, Contractor Support Services, and Commissioning Ceremony. (NAVSEA CEH)

Payback Period - The payback period is the time required for the cumulative value of savings to be equal to the cumulative value of investment. The payback period measures the number of years needed to recover the investment or break even. The accept-reject criterion for this financial indicator is the ability of the program to equal or better the organization's required payback period. (NAVSEA CEH)

Point Estimate - An estimate with a single point result rather than a probabilistic estimate with a cost range. (NAVSEA CEH)

Production & Deployment - The purpose of the Production and Deployment Phase is to produce and deliver requirements-compliant products to receiving military organizations. (DoDI 5000.02)

Production - The act of constructing a Sea Systems or an Unmanned Maritime System; normally initiated at Milestone C.

Recurring - Costs that vary with the quantity being produced, such as labor and materials. (Federal Acquisition Regulations System)

Regression Analysis - A quantitative technique used to establish a line-of-best-fit through a set of data to establish a relationship between one or more independent variable and a dependent variable. That line is then used with a projected value of the independent variable(s) to estimate a value for the dependent variable. (NAVSEA CEH)

Research and Development - Consists of development costs incurred from the beginning of the conceptual phase through the end of the system development and demonstration phase, and potentially into low-rate initial production. Typically includes costs of concept refinement trade studies and advanced technology development; system design and integration; development, fabrication, assembly, and test of hardware and software for prototypes and/ or engineering development models; system test and evaluation; system engineering and program management; peculiar and common support equipment, peculiar training equipment/ initial training, technical publications/ data, and initial spares and repair parts associated with prototypes and/ or engineering development models. (CAIG)

Return on Investment (ROI) - The strict meaning of ROI is "Return on Invested Capital." Most business people, however, use "ROI" simply to mean the incremental gain from an investment, divided by the cost of the investment. ROI is the net benefit expressed as a percentage of the investment amount: ROI = NPV / PV Investment. (NAVSEA CEH)

Risk - A measure of the inability to achieve program objectives within defined cost and schedule constraints. Risk is associated with all aspects of the program, e.g., threat, technology, design processes, or Work Breakdown Structure (WBS) elements. It has two components, the probability of failing to achieve a particular outcome, and the consequences of failing to achieve that outcome. (Defense Acquisition Acronyms and Terms, Eleventh Edition, September 2003, Defense Acquisition Press)

Sea System - Applies to surface and submersible ship platforms, systems, weapons, and equipment required for performing naval tasks at sea. (MIL-STD-881C)

Sensitivity Analysis - A technique used to discover how sensitive the results from economic and financial models are to changes in the input values of the variables used to calculate the results. A high degree of sensitivity is a warning to interpret the results of the model with care and circumspection, especially because many of the input variables themselves, will have been estimated and therefore be subject to error. Use of econometric models must not obscure

awareness of their limitations and possible pitfalls, especially when they are being used for forecasting. (NAVSEA CEH)

Ship Work Breakdown Structure (SWBS) – SWBS groups are defined by basic function. The functional segments of a ship, as represented by a ship's structure, systems, machinery, armament, outfitting, etcetera, are classified by a system of 3-digit numeric groups. There are ten major functional groups, the last two of which are utilized primarily for cost estimating and progress reporting:

- 000 - General Guidance and Administration
- 100 - Hull Structure: Includes shell plating, decks, bulkheads, framing, superstructure, pressure hulls, and foundations
- 200 - Propulsion Plant: Includes boilers, reactors, turbines, gears, shafting, propellers, steam piping, lube oil piping, and radiation shielding
- 300 - Electric Plant: Includes ship service power generation equipment, power cable, lighting systems, and emergency electrical power systems
- 400 - Command and Surveillance: Includes navigation systems, interior communications systems, fire control systems, radars, sonars, radios, teletype equipment, telephones, and command and control systems
- 500 - Auxiliary Systems: Includes air conditioning, ventilation, refrigeration, replenishment-at-sea systems, anchor handling, elevators, fire extinguishing systems, distilling plants, cargo piping, steering systems, and aircraft launch and recovery systems
- 600 - Outfit and Furnishings: Includes hull fittings, painting, insulation, berthing, sanitary spaces, offices, medical spaces, ladders, storerooms, laundry, and workshops
- 700 – Armament: Includes guns, missile launchers, ammunition handling and stowage, torpedo tubes, depth charges, mine handling and stowage, and small arms
- 800 - Integration/Engineering: Includes all engineering effort, both recurring and nonrecurring. Nonrecurring engineering is generally recorded on the Construction Plans category line of the End Cost estimate while recurring engineering is recorded in Group 800 of the Basic Construction category
- 900 - Ship Assembly and Support Services: Includes staging, scaffolding, and cribbing; launching; trials; temporary utilities and services; materials handling and removal; and cleaning services

Since the SWBS is a hierarchical system, the level of sub-categorization is flexible. Volume 2 of the ESWBS alphabetically lists SWBS items, the SWBS element title of the items, and the SWBS element number of the items. The first digit of the SWBS element number will correspond to the first digit of the functional group. (NAVSEA CEH)

Should Cost Analysis - A study of contract price, which reflects reasonably achievable contractor economy and efficiency. It is accomplished by a government team of procurement, contract administration, audit and engineering representatives performing an in-depth cost analysis at the contractor's and subcontractor's plants. Its purpose is to develop a realistic price objective for negotiation purposes. (NAVSEA CEH)

Sustaining Support – Cost of support activities other than maintenance that can be attributed to a system and are provided by organizations other than operating units. (O&S Cost Estimating Guide)

Total Ownership Cost (TOC) - The sum of all financial resources necessary to organize, equip, train, sustain, and operate military forces sufficient to meet national goals in compliance with all laws, all policies applicable to DoD, all standards in effect for readiness, safety, and quality of life, and all other official measures of performance for DoD and it's components. TOC is comprised of cost to research, develop, acquire, own, operate, and dispose of weapon and support systems, other equipment and real property, the costs to recruit, train, retain, separate and otherwise support military and civilian personnel, and other cost of business operations in DoD. (NAVSEA CEH)

Technology Maturation & Risk Reduction – The purpose of this phase is to reduce technology, engineering, integration, and life-cycle cost risk to the point that a decision to contract for EMD can be made with confidence in successful program execution for development, production, and sustainment. (DoDI 5000.02)

Uncertainty - A condition, event, outcome, or circumstance of which the extent, value, or consequence is not predictable. It is a state of knowledge about outcomes in a decision, which

are such that it is not possible to assign probabilities in advance. Some techniques for coping with this problem are a fortiori analysis (making use of conclusions inferred from another reasoned conclusion or recognized fact), contingency analysis, and sensitivity analysis. (Defense Acquisition Acronyms and Terms, Eleventh Edition, September 2003, Defense Acquisition Press)

Unit Operations - Unit Operations includes the unit-level consumption of operating materials such as fuel, electricity, expendable stores, training munitions and other operating materials. Also included are any unit-funded support activities; training devices or simulator operations that uniquely support an operational unit; temporary additional duty/temporary duty (TAD/TDY) associated with the unit's normal concept of operations; and other unit funded services. Unit-funded service contracts for administrative equipment as well as unit-funded equipment and software leases are included in this portion of the estimate. (O&S Cost Estimating Guide)

Unit-Level Manpower - Cost of operators, maintainers, and other support manpower assigned to operating units; may include military, civilian, and/or contractor manpower. (O&S Cost Estimating Guide)

Unmanned Maritime System - Applies to unmanned surface and submersible ship platforms, systems, weapons, and equipment required to perform naval tasks at sea. (MIL-STD-881C)

APPENDIX B: Additional Acquisition Briefs and Studies.

Title:	**"Ship Cost Estimating, Then and Now"**
Authors:	Irvin M. Chewning (NAVSEA 05C)
Study Date:	February 2007
Presentation Forum:	DoDCAS Symposium 2007
Description:	This brief provides a historical background of the changes in ship cost estimating methods over time. Back in the early days, there were no established policies for handling cost growth which resulted in continuous annual funding requests. The government was only reporting ship basic cost and was using analogy and high level cost estimating methods. As ships' costs continued to grow and get high visibility from stakeholders, the need for better policies and cost estimating processes became apparent. The growing emphasis on affordability prompted changes in cost estimating policies, procedures, and methods. Government organizations needed better understanding of the cost drivers and total ownership cost impacts. The cost estimating analysis function became an integral part of the ship design process. Nowadays, improved cost estimating methods and processes include better cost models and databases, contractor cost reporting, inflation guidance, and risk analysis.
Data Source:	• SECNAV Testimony, July 1939 • 2005 NAVSEA Cost Estimating Handbook • DoD Instruction 7000.2 • Title 10 United States Code (USC) • Parametric Engineering and Design Man-Hours Model (PEDMM)
Cost Drivers:	The brief did not discuss specific cost drivers for ships.
Cost Estimating Relationships:	The brief did not discuss specific CERs for ships.
Conclusion:	Due to ships' growing costs, there is more emphasis on affordability. Better policies, processes, and methods keep evolving to understand total ownership cost impacts. The cost estimating analysis function is important and has become an integral part of the ship design process.
Recommended Usage:	This brief provides a good historical background on the evolving ship cost estimating process. It identifies the improvements in the ship cost estimating policies and methods over time but it lacks the detailed instructions on how one can perform current ship cost estimating practices. It also identifies various data warehouses and modeling tools that can be useful to a cost analyst such as Visibility and Management of Operating and Support Costs (VAMOSC), Operating and Support Cost Analysis Model (OSCAM), Performance Based Cost Models (PBCM), etcetera.
References Cited:	None

Secondary Production Studies

	Study Title	Authors	Forum	Description	CERs	Recommended Usage
All Ship Types	"An Application of Data Mining Algorithms for Shipbuilding Cost Estimation"	Bohdan Kaluzny	SCEA / ISPA (2011)	Two independent methods were used in generating a cost estimate for the HNLMS Rotterdam and Johan de Witt. The first method, classified as a parametric approach, employs the M5 model tree algorithm of Quinlan (1992), a system that combines features of decision trees with linear regression models. The second method employed is an analogy approach based on hierarchical cluster analysis and non-linear optimization.	Data: • Amphibious assault ship (AAS); • Auxiliary oiler replenishment (AOR); • Landing platform dock (LPD); • Landing platform helicopter (LPH); • Landing ship dock (LSD); and, • Icebreaker $Log_{10}(cost) = 8.6376 - 0.0651(rank\ in\ class) + 0.0637(\#\ of\ LCAC)$. $Log_{10}(cost) = 6.95 + 0.01(length\ of\ ship\ in\ meters)$	The CERs are specific to an international ship, and not necessarily relevant to any US ship, however the decision tree analytics involved in CER development may provide insightful for all CER development. It provides features of decision trees with linear regression models to both classify similar ships (based on attributes) and build piece-wise multivariate linear regression models.
All Ship Types	"An Enterprise Model of Rising Ship Costs: Loss of Learning Due to Time and Labor Force Instability"	Dick Coleman, Jessica Summerville, Bethia Cullis, Gabe Rutledge, Eric Druker, Peter Braxton,	DoNCAS (2008) SCEA / ISPA (2007)	This paper outlines the cost implications for ships associated with decreased budgets. Fewer ships, divided among a fixed industrial base, causes a reduced base for overhead and reduced opportunity for quantity driven learning. This paper will also demonstrate that less demand causes longer times for ship-class acquisitions, increasing time between ship starts. Less steady demand causes workforce instability. Both of these effects result in increased costs.	Advanced Learning Model accounting for additional parameters (outside a normal learning curve analysis) were included. Those parameters were: • Change Orders • Embedded Change Orders • Green Labor – Workers with less than 5 years experience • Loss of learning due to interval effect	Relevant for all ship types

Amphibious Warfare	"LPD-17 Cost Estimate Case Study"	Maurice Gauthier, Jim MacStravic, Tzee-Nan Lo, Scott Comes, Robert Goldberg	DoDCAS (1999)	This briefing represents a summary of a panel presented at DoDCAS 1999, where panelists discussed the LPD 17 Acquisition Strategy, the estimating methodology, the combat systems, and the budget and resource allocation. This information is updated in 2004 and 2006.	This analysis discusses the cost impact of ensuring design for ownership is a priority at the program's outset, the impact of the implementation of an IPPD team, and the introduction of shipbuilder teams.	Study is useful for understanding the baseline acquisition strategy of the LPD-17. However, there are little details in the estimating methodology and the concepts are dated.
Amphibious Warfare	"Ship Acquisition Case Study – The LPD 17 Program"	Patricia Bronson, Dr. Tzee-Nan Lo, Dr. David L. McNicol	DoDCAS (2006)	Study preceded by two other studies, "LPD 17 Acquisition (MSII)," Tzee-Nan Lo, Scott Comes, Robert Goldberg, Maurice Gauthier, DoDCAS 2004, and "LPD-17 Cost Estimate Case Study," Maurice Gauthier, Jim MacStravic, Tzee-Nan Lo, Scott Comes, Robert Goldberg, DoDCAS 1999 The target price for the LPD-17 was $641M. When it was finally delivered, the LPD-17 cost $1.6B. This study presents analysis of historical cost data from SARs that support a much higher cost estimate for the LPD-17.	Comparison of labor-hours per-metric-ton to Ship Builder's contract cost per-metric-ton using data from SARs for • MHC-51 • MCM-1 • FFG-7 • DDG-51 • CG-47 • LHD-1 • LSD-41 • LPD-17 LPD-17 lead-ship initial contract cost estimate is not consistent with historical SAR data, but the actual data is. The average ratio for the lead to follow ship contract cost is 2.5.	The same principles from this analysis, the use of SAR data to evaluate cost growth, can be applied broadly to all ship types.

Submarine	"The NSSN (Virginia Class) Estimate"	Dr. David Nicholls	DoDCAS (2007)	This brief is an overview of the cost estimating approach for NSSN (VIRGINIA Class submarine). NSSN used SEAWOLF as an analogous program for the lead ship estimates. It also looked at Trident and LOS ANGELES class for learning curve assumptions. The brief described getting detailed inputs from Electric Boat that helped with the estimates and the teaming arrangement with Newport News. There were cost estimates presented in this brief.	No CERs were developed.	This provides a good background of the cost estimating approach and assumptions for NSSN (VIRGINIA Class) program.
Submarine	"Learning from Experience Volume I: Lessons from the Submarine Programs of the United States, United Kingdom, and Australia"	John F. Schank, Frank W. Lacroix, Robert E. Murphy, Mark V. Arena, Gordon T. Lee (RAND)	RAND Published Paper – 2011.	This paper focuses on lessons learned from the submarine programs of the United States, United Kingdom, and Australia. It primarily focuses on: • Top-level strategic lessons • Lessons when setting operational requirements • Lessons when establishing an acquisition and contracting environment • Lessons when designing and building a submarine • Lessons for integrated logistics support	No CERs were developed	This is a good reference for someone looking to learn from the past in regards to submarine program success. It presents many lessons learned from the three countries in acquiring submarines.

Submarine	"Learning from Experience Volume II: Lessons from the U.S. Navy's Ohio, Seawolf, and Virginia Submarine Program"	John F. Schank, Frank W. Lacroix, Robert E. Murphy, Mark V. Arena, Gordon T. Lee (RAND)	RAND Published Paper – 2011.	This paper reviews the lessons learned from three most recent US submarine acquisition programs (Ohio, Seawolf, and Virginia programs). It goes through each one and examines each in great detail before presenting what lessons should be gleaned from the program.	No CERs were developed	This paper is a good reference for someone trying to learn more about recent US submarine acquisition programs and what should be learned from each. Though it doesn't focus on cost, it points out how many circumstances can lead to cost growth.

APPENDIX C: Additional O&S Briefs and Studies

Secondary O&S Studies

Study Title	Authors	Forum	Description	CERs	Recommended Usage
"DD-963 Spruance Class Ship Aging vs. Maintenance Expenditures from FY91 to FY00"	Bill Stranges, Colleen Adamson, Andrea Nowicki, Deanna Ohwevwo (NCCA)	SCEA National Conference (2002)	Investigates DD-963CL (normalized to remove forward developed ships, those nearing decommissioning, those with major corrective actions, and years prior to VAMOSC data source update), to identify age effect on annual ship maintenance cost.	Visual analysis seemed to indicate no age effect present for the DD-963CL.	This study concludes there are no age effects on maintenance for this particular class, which may be impacted by anecdotal information of a backlog of maintenance requirements. Class average age was used in this study, which may skew results as class average ages fluctuate as hulls become active and retire. It is worth investigating average age at the individual hull level for a variety of different ship classes/types.
"Addressing the Fully Burdened Cost of Fuel (FBCF) for Navy Ship Applications"	Adam Kearns (NAVSEA 05C2)	DoDCAS	Derives a fully burden cost of fuel in order to meet DoD guidance that requires that the fully burdened cost of fuel be applied in all trade-off analyses conducted over a system's life-cycle. Incorporates risk in the analysis	Updates Delivery cost by 1. Incorporating the fuel delivery vessel inventory over 30 years, 2. Applying a more realistic depreciation methodology, 3. Including all propulsion fuel consumed (DFM & JP5)	This study should be utilized when an analyst must evaluate the impact of the cost of fuel on a mission or a platform.
"Operating and Support Cost Estimating Methodologies for Combatant Ships"	Paul Hardin (Technomics)	Project Deliverable (2004)	Develops methodologies for estimating combatant ship O&S costs based on VAMOSC data for combatants and adjusts the CERs for a variety of differences (weight, OPTEMPO, density, etcetera) as needed.	Fuel (Bbls per SHU and $ per Yr), Unit Level Consumption ($ per Yr), Support Contractor Management ($ per Yr), Training ($ per Yr)	This study explores cost drivers of a variety of O&S cost elements and presents CER structures that include the relevant cost drivers. The identified cost drivers and equation structures could be updated using the most recent VAMOSC data and the approach could be leveraged for other ship types.

"Modeling Data with Distinct Zero and Non-Zero Cost Years"	Laura Friese, Lew Messing, Ann Moser (Northrop Grumman Corporation)	SCEA National Conference (2006)	Discusses modeling the significantly positive cost years separately, in order to better understand the cost drivers that apply to those particular costs, rather than averaging the years with costs along with the years without costs. Modeling the proportion of the time the costs are zero or very small from the historical data is also discussed.	Two different CERs for centrally provided material $ (based on VAMOSC data for combatants) are shown to compare with and without years of zero cost.	This study provides an approach to analyze the data into separating groupings of years with and years without costs, resulting in two distinct CERs. Furthermore, this study shows how specific overhaul or upgrade schedules can be incorporated in an estimate to provide a more customized approach.
"Ship Scheduled Overhaul Costs Over Time"	Jessica Summervill e, Richard Coleman, Megan Dameron, Stephanie Leach (Northrup Grumman Information Technology – TASC)	SCEA/ISPA National Conference (2003)	Examines a 10-year average of annual Scheduled Overhaul costs for a variety of combatant and amphibious ships to better understand potential age effects. Repair parts and other POL were also analyzed.	Average annual scheduled overhaul costs, repair parts, and other POL by year	This study demonstrates and quantifies the age effect on a select number of O&S cost elements. Although it is noted that the datasets are somewhat limited, the methodology couple be used with an updated dataset containing hulls with an increased age as a significant amount of time has passed since the study's development.

O&S Case Studies

Study Title	Authors	Forum	Description	CERs	Recommended Usage
"Naval VAMOSC"	Mike Carey (NCCA)	DoDCAS (2008)	Provides an overview of Naval VAMOSC, introduces recent enhancements, and describes additional cost tools (OSCAM, VAMOSC VIEWS, Aviation Almanacs, and etcetera).	No CERs are provided.	This study provides a good overview of Navy VAMOSC and the data that is collected. The most up-to-date information on VAMOSC can be found at https://www.vamosc.navy.mil/.
"STARS versus VAMOSC Expenditure Reporting for Intermediate/Depot Maintenance"	Paul Hardin (Technomics)	Project Deliverable (2004)	Relates VAMOSC reported costs to STARS expenditures related to Intermediate and Depot Maintenance costs. Seven years of VAMOSC data was used to compare to STARS data.	No CERs are provided.	This study shows that at the aggregate level, STARS and VAMOSC data appear comparable. However, at the ship or ship class level, comparisons don't appear to be as useful as half of the STARS expenditures cannot be traced to the ship level. This study could be updated if STARS non-ship UICs could be mapped and/or allocated to specific ships, ship classes or ship types.

"How VAMOSC VIEWS Can Help You!"	Brian Welsh, Paul Hardin, Elizabeth Koza, Walt Cooper, Robert Nehring (Technomics) and sponsored by Mike Carey (NCCA)	SCEA/ISPA Joint Annual Conference (2012)	Describes three practical applications of VAMOSC VIEWS, which are a graphical representation of Navy VAMOSC data that provide useful insights about O&S costs for ships, aircraft, and Military Sealift Command (MSC) vessels: (1) Development of Early-on ROM Estimates, (2) Assessment of Technical Inputs/Assumptions, and (3) Performing Cost Assessments.	Notional CERs are estimating using visual analysis of the VAMOSC historical data trends for the case studies.	This study shows that VAMOSC VIEWS are powerful tools that provide both analysts and decision makers an understanding of O&S costs and how they can be used to assess/validate engineering or design assumptions. In addition, the study gives examples how VAMOSC VIEWS can be used by the cost analyst to ask additional questions related to provided technical/cost inputs to better understand the requirements and validate the assumptions.
"VAMOSC Views: Developing & Assessing O&S Cost Estimate"	Paul Hardin (Technomics) and sponsored by Mike Carey (NCCA)	DoDCAS (2008)	Introduces VAMOSC VIEWS, which a set of graphical views designed to facilitate user understanding and application of VAMOSC Ships and Aircraft data. VAMOSC VIEWS are available on the VAMOSC website.	CERs can be developed based on the VAMOSC VIEWS provided.	This study shows analysts how VAMOSC VIEWS can be used to make real-time assessments/decisions, explain data anomalies and highlight accounting changes in VAMOSC reporting, and reveal cost drivers for use in developing CERs. Although this study provides a good overview of Navy VAMOSC VIEWS, the most up-to-date information (including an interactive VAMOSC VIEWS Tool) can be found at https://www.vamosc.navy.mil/
"Introduction to the Operating and Support Cost Analysis Model (OSCAM)"	Molly Mertz and Geoff Pawlowski (OSCAM Program Office)	DoDCAS (2008)	Provides an overview of OSCAM, which is a jointly developed, NCCA sponsored, family of software tools used to help develop Operating and Support Cost Estimates that meet a wide range of requirements Notional examples of estimates OSCAM can be used to develop are given for a variety of the different OSCAM suites.	No CERs are provided.	This study provides a good overview of the OSCAM's capabilities and programs that OSCAM has supported. The most up-to-date information on OSCAM can be found at http://www.oscamtools.com/.
"An Operations and Support Cost Analysis Model for Ships and Ship Systems"	Paul Hardin (NCCA)	DoDCAS (1999)	Provides an overview of OSCAM, which is a jointly developed, NCCA sponsored, family of software tools used to help develop Operating and Support Cost Estimates that meet a wide range of requirements. The strengths and limitations are also discussed.	Screenshots of OSCAM are shown but no specific CERs are provided.	This study provides a good overview of the OSCAM's capabilities and programs that OSCAM has supported. The most up-to-date information on OSCAM can be found at http://www.oscamtools.com/.

APPENDIX D: References

1. DoDD 5000.01, "The Defense Acquisition System," 12 May 2003, Certified Current as of November 20, 2007
2. DoDI 5000.02, "Operation of the Defense Acquisition System," November 26, 2013
3. Department of the Navy Implementation and Operation of the Defense Acquisition System and the Joint Capabilities Integration and Development System, SECNAVINST 5000.2E, 1 September 2011
4. "Operating and Support Cost-Estimating Guide," Office of the Secretary of Defense Cost Analysis Improvement Group, October 2007
5. "Department of Defense Standard Practice Work Breakdown Structures for Defense Materiel Items, MIL-STD-881C," 3 October 2011
6. "Department of the Navy Total Ownership Cost (TOC) Guidebook," February 2012
7. "2005 Cost Estimating Handbook, NAVSEA" aka "NAVSEA CEH"
8. NAVSEA Instruction 4790.01A
9. "Defense Acquisition Guidebook," 15 May 2013
10. "Department of Defense Earned Value Management Guide," October 2006
11. "SECVAVINST 5030-1L, N802K1, Classification of Naval Ships and Craft," 22 January 1993
12. "Are Ships Different, Policies and Procedures for the Acquisition of Ship Programs," Jeffrey A. Drezner, Mark V. Arena, Megan McKernan, Robert Murphy, Jessie Riposo, RAND, 2011
13. "Ship Design Tools Roadmap," CAPT Norbert Doerry, SNAME-ASNE Joint Ship Design Committee (SDC), 27 March 2008
14. SECNAV Instruction (SECNAVINST) 5000.2
15. Joint Publication 1-02, "Department of Defense Dictionary of Military and Associated Terms" aka JP 1-02